STOR-MOR

PORTABLE BUILDINGS

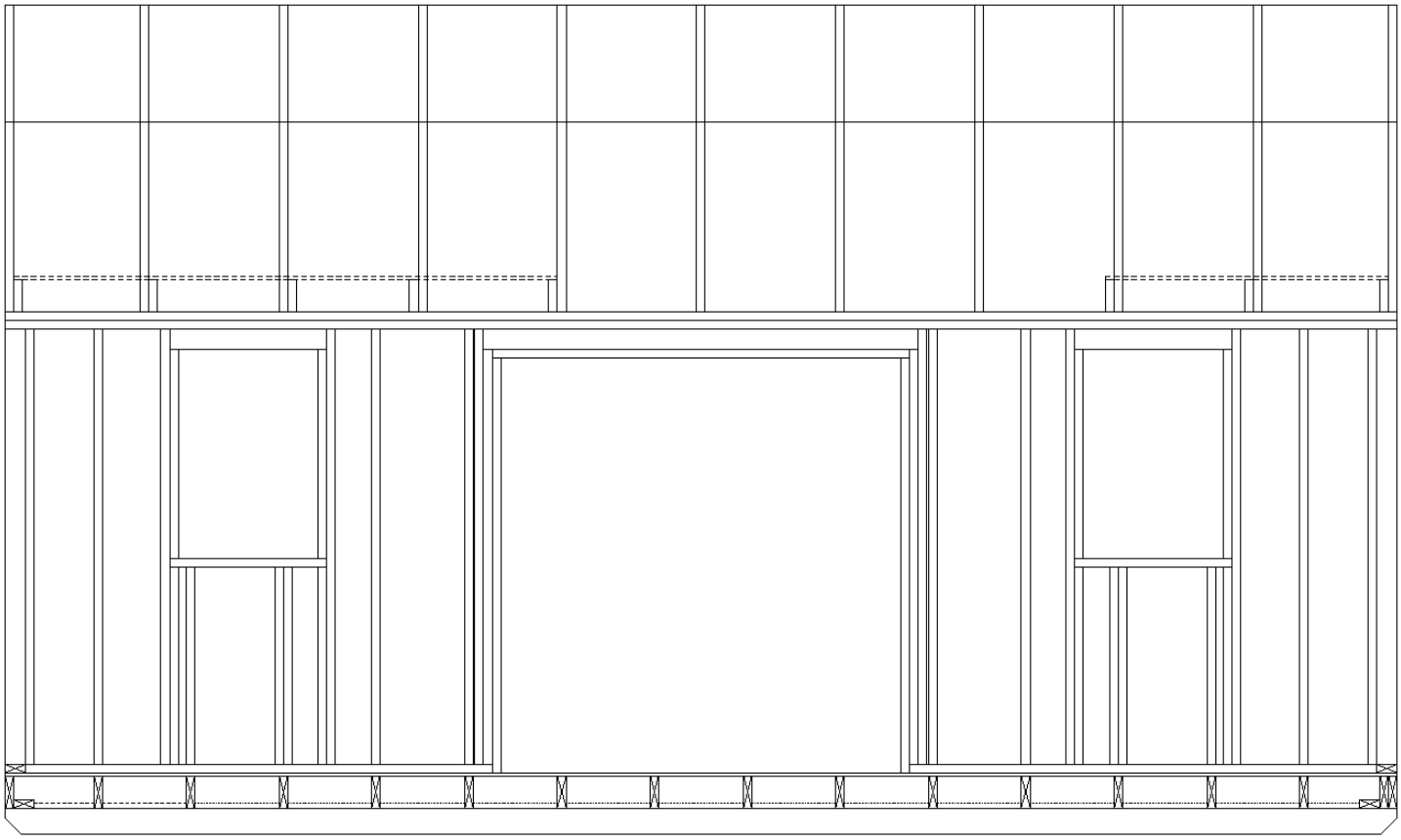

CONSTRUCTION MANUAL

STOR-MOR PORTABLE BUILDINGS
CONSTRUCTION MANUAL:

FLOOR SYSTEM:

- **4X6 Pressure Treated Skids**
  - Skids are double notched on 12” and 16” centers at approximately 1” deep.
  - Center skids are to be spaced 60” on center.
    - 8’ and 10’ wide buildings only have 2 rows of skids.
    - 12’ and wider get 4 rows of skids.
  - ***Outer Skids are placed 5-1/2” from the outside of the rim board.***
    - ***This stays the same on 12’ and wider.***
  - Buildings longer than 20’ will require a “Splice Board”.
    - 2x4x12’s, Pressure Treated, are used for Splice Boards.
      - Cut the 2x4x12 in half and use half on each side of the skid.
  - Fasten the Splice Board to the skid using 3” nails.
    - Two rows of nails spaced 3” o.c.
    - Rows should be staggered.

EXAMPLES:

4X6 Double Notched Pressure Treated Skid:

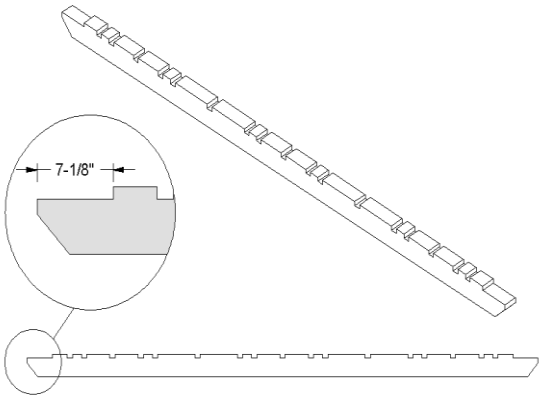

2x4x12 Pressure Treated “Splice Board”:

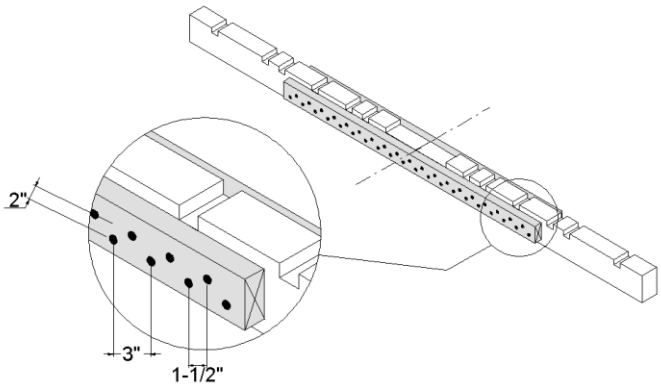

- **2x6 Pressure Treated Floor Joists**
  - Joists are spaced 16” on center for all buildings except ***GARAGES.***
    - ***GARAGES*** are spaced 12” on center.
  - Double Joist the front of every building.
    - Single Joist on the back. (Unless longer than 20 ft.)
  - Double Joist the front and back on all buildings longer than 20 ft.
  - Use a Double Joist at the ‘Splice’ of every building.
  - Fasten each End Joist to each skid with 4” GRK Screws. Use one GRK Screw per skid.
  - Joists fasten to skids with 3” nails. Toenail two nails on each side of the joist at each skid.
    - 4-1/2” Truss Screws should be used to fasten the floor joists to the skids.
      - 1 screw every other joist at each skid.
  - Hurricane clips are to be used in Florida or any other I-10 region where required.
    - 6” hurricane clips may be required in certain regions as additional support to fasten the joists to the skid. (Check with Quality Control for your requirements.)
      - You must fill all of the holes with a PP nail on the top and bottom half of the clip.
  - When using double joists, fasten together using 3” nails. Use 2 nails approximately 24” o.c. on each side.

EXAMPLES:

Double End Joist:

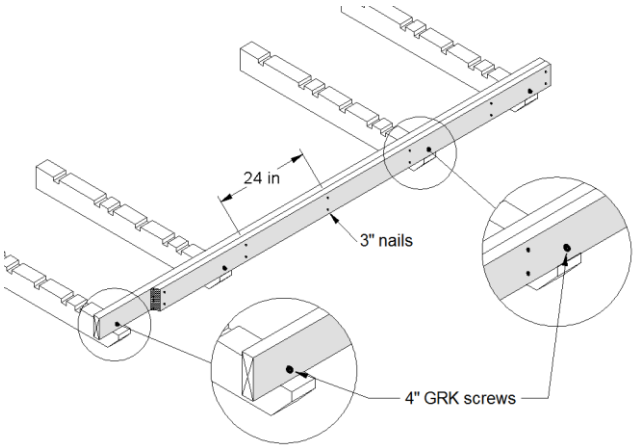

Nailing Floor Joists:

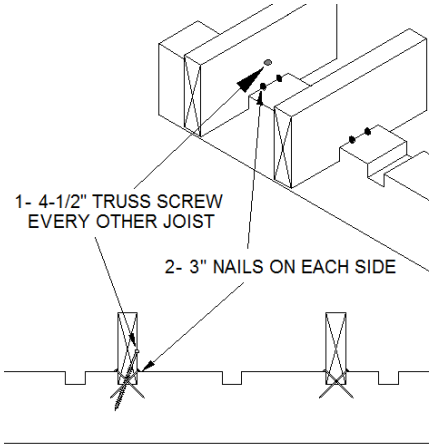

Installing Hurricane Clips:
Florida and Coastal Regions.

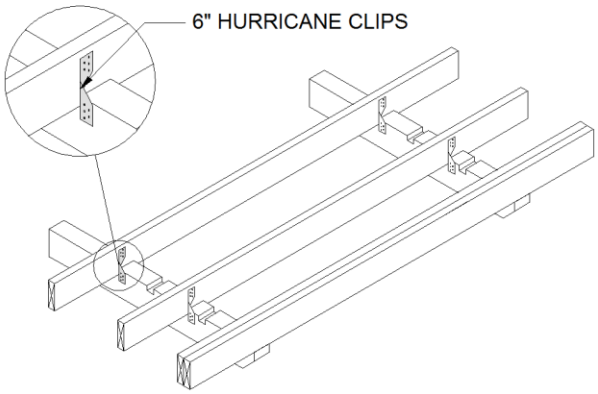

- **2x6 Pressure Treated Rim Board**
  - Use 2x6 PT for the rim board according to the length of the building.
    - Use lengths that will provide as little waste as possible.
  - Fasten with 3” nails. Four nails for each side of the joist evenly spaced.
  - Butt Joints on the rim board should have a Joint Splice scabbed on the inside of the rim board.
    - Cut a 2x6 PT that spans from one joist past the butt joint to another joist. Approximately 30-1/4”.
    - Nail the Joint Splice from the inside out. Use a two row, 3” spaced, staggered nail pattern.
    - Cut the Joist back 3” to compensate for the Scabs on each side.
- **14ft & 16ft Wide buildings:**
  - **All 14 and 16 wide buildings get Double Banded. That’s two Rim Boards on each side, the full length.**
    - For these, you will not need Joint Splices. But you will need to stagger the butt joints to where no two come together on the same side.
  - You will need to order your 14 and 16 wide 2x6 PT joists as follows:
    - 14ft wall to wall: 2x6x162” PT. 14ft eave to eave: 2x6x152” PT.
    - 16ft wall to wall: 2x6x186” PT. 16ft eave to eave: 2x6x176” PT.

EXAMPLES:

2x6 Pressure Treated Rim Board:

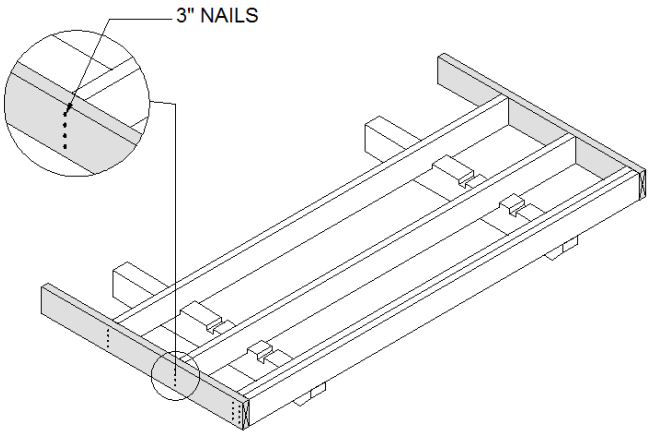

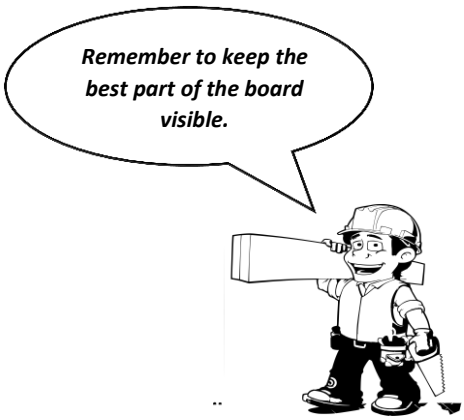

Inside view of the Joint Splice:

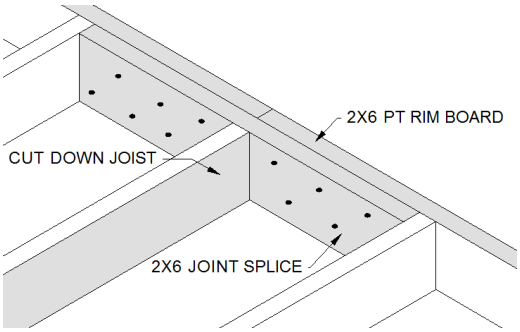

Outside view of the Joint Splice:

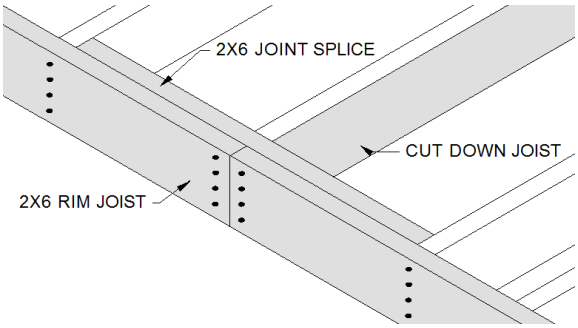

- **2x4x12 Pressure Treated Drag Board**
  - **Cut 2x4x12 PT in half. Use half on each end of the building.**
  - Drag Boards are to be installed at each end of every building.
  - The Drag Board only needs to be attached to the two center skids.
  - Lay it flat, on the inside and snug against the End Joist. Use one 4” GRK screw and four 3” nails per skid to attach the Drag Board. (Nail in a square pattern with the GRK Screw in the center).
  - Use two 3” nails on each end of the drag board nailed through the face of the End Joist.
    - Start about 6” outside of the center skids and space nails evenly.
  - Use three 3” nails to attach the center of the Drag Board between the skids. Approximately 15” apart.
    - These nails will be through the face of the End Joist. In some cases these nails will be seen. So be sure they are properly spaced and appear even.

EXAMPLES:

2x4 Pressure Treated Drag Board:

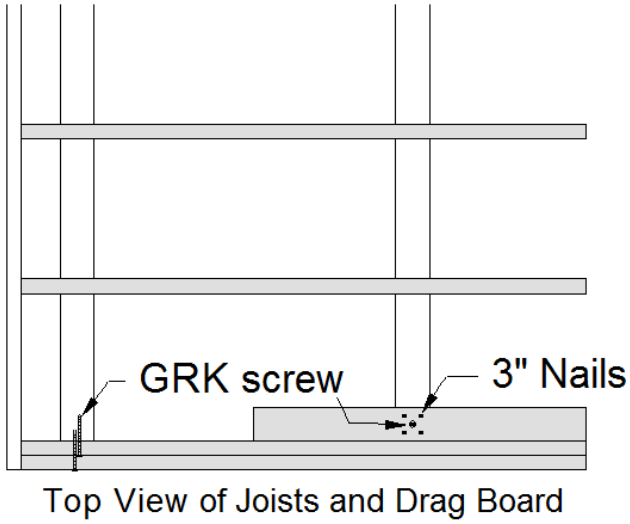

Nailing to the Drag Board on Single End Joist:

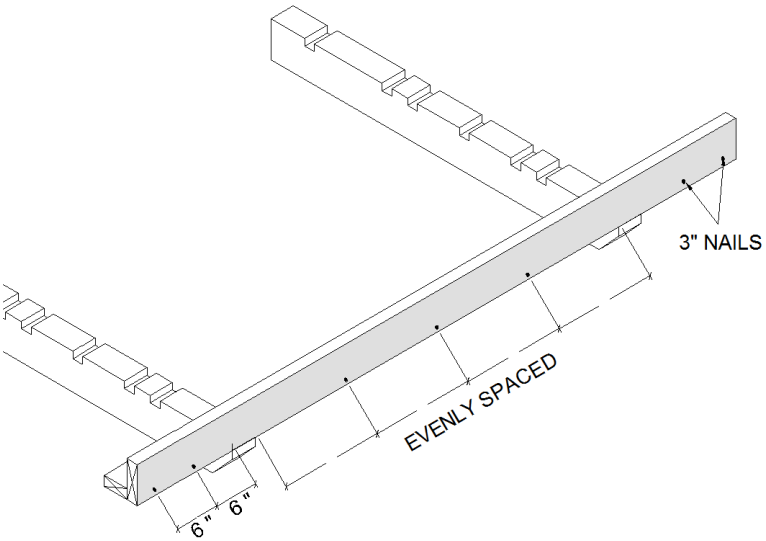

- **Installing GRK Screws on Joists and Drag Board**
  - Double End Joist for Center Skids:
    - On the *First Joist,* screw the 4” GRK at approximately a 45 to 60 degree angle, 1-1/2” up on the 2x6 Joist.
      - Be sure to counter sink the head.
    - For the *Second Joist*, screw the 4” GRK at approximately a 45 to 60 degree angle, 1-1/2” up on the 2x6 Joist.
      - Be sure to counter sink the head.
    - For the *Drag Board*, screw the 4” GRK straight down into the 4x6 skid.
      - Be sure to counter sink the head.
  - Double End Joist for Outer Skids:
    - Attach the First and Second Joist with the 4” GRK at approximately a 45 to 60 degree angle, 1-1/2” up on the 2x6.
  - Single End Joist for Center Skids:
    - On the Joist, screw the 4” GRK at approximately a 45 to 60 degree angle, 1-1/2” up on the 2x6.
      - Be sure to counter sink the head.
    - For the *Drag Board*, screw the 4” GRK straight down into the 4x6 skid.
      - Be sure to counter sink the head.

EXAMPLES:

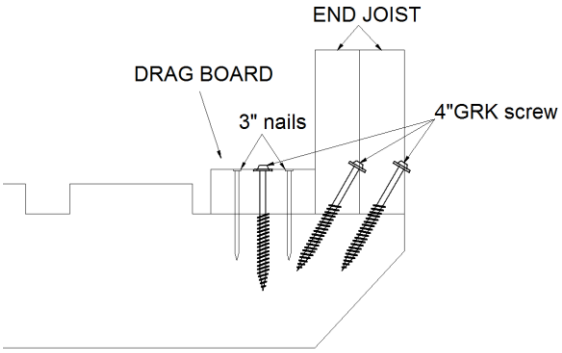

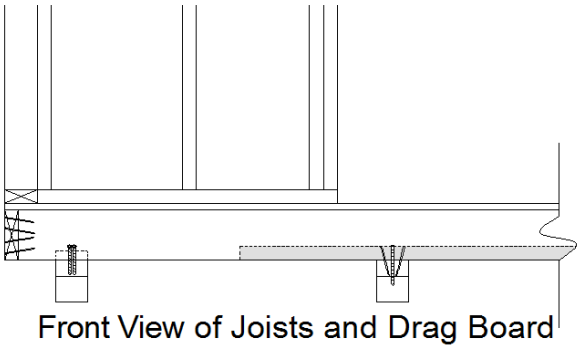

- **Installing the Garage door End Joists**
  - Install two- 2x6 PT End Joists.
  - Install a 2x4 PT Drag Board the full width of the building. This board is installed laid flat.
    - Use 4” grk screws to fasten to the each skid along with 3” nails as necessary.
  - Then place a 5/4x6 PT deck board, laid flat, on top of the drag board the full width of the building.
    - Fasten with nails.
  - Last, place two- 2x6 PT Joist, laid flat, on top of the 5/4x6 PT deck board, the full width of the building.
    - Fasten with nails and grk screws as needed.

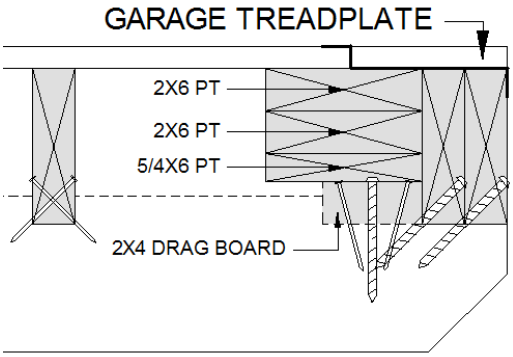

- **Double Center Joist at Skid Splices**
  - Fasten two 2x6 PT Joists together, using 3” nails. Use 2 nails approximately 24” o.c. on both sides of the Double Joist. This is the “Splice Joist”.
    - Center the Double Joist on the seam of the splice and toenail into the skid with 3” nails, 2 on each side of the joist.
  - Lay another 2x6 PT Joist flat in the notch next to the Double Joist, on the side that would be toward the front of the building. This is the “Center Drag Board”.
    - Fasten with 5 – 3” nails on each skid. Nail Pattern: 
  - Cut scrap 2x4 PT to fill the remaining notches on the opposite side of the Double Joist.
    - Cut to fit “Tight”, nail with the same pattern. These are the “Splice Fillers”.

<u>Do Not Use GRK SCREWS on the SPLICE JOIST, SPLICE FILLERS, or CENTER DRAG BOARD For Any Reason!!</u>

<u>EXAMPLES:</u>

Splice Joist and *Splice Fillers*:

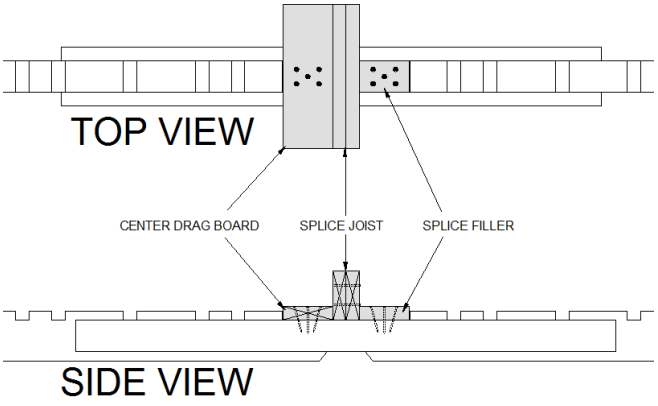

Complete Splice:

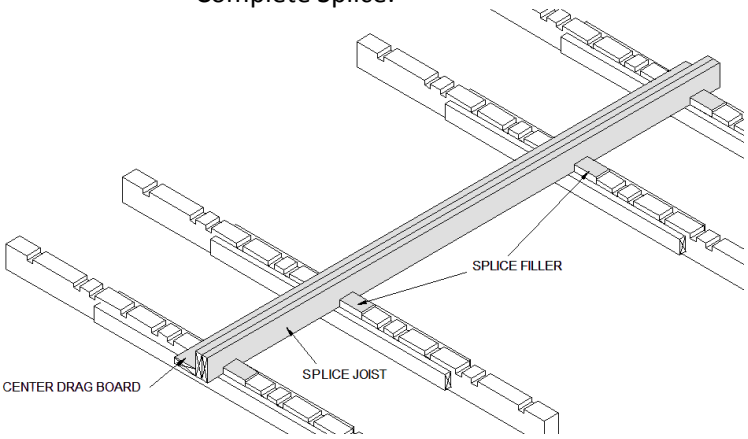

How to make sure a floor system is Square:

PYTHAGOREAN THEOREM ($a^2 + b^2 = c^2$) or 3, 4, 5.

Stretch a Tape Measure from one corner diagonally to the opposite corner of the floor from both sides. When the floor is Square you will have the exact same distance. If one side is different from the other, adjust accordingly to get the floor Square.

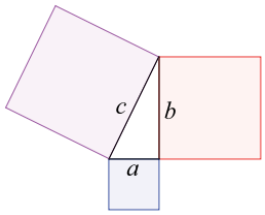

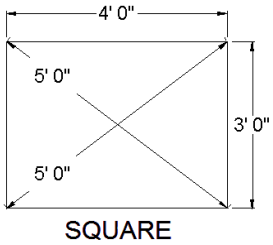

Two Minutes now, can save Several Later.

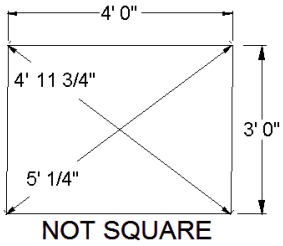

FLOOR SHEATHING INSTALLATION AND NAIL PATTERN:

- **5/8" T&G Flooring**
  - **USED IN ALL BUILDINGS EXCEPT GARAGES.**
  - *Always start with a full sheet.*
    - This will help when squaring the floor.
  - Stagger flooring seams every 4 ft.
  - Use 2" Galvanized Nails on the flooring.
  - Space nails 6" o.c. on all borders of the floor.
    - 9 nails on "Butt Seams".
  - Nail 12" o.c. across floor joists in the "Field".
    - 5 nails in the "Field" across joists.
  - For True 12' and wider buildings, you will need to start your flooring approximately ½" from the edge of the Rim Joist.
    - This is because you lose a ½" per 4' of width due to the tongue and groove.

½" Flooring Offset (12ft and wider)

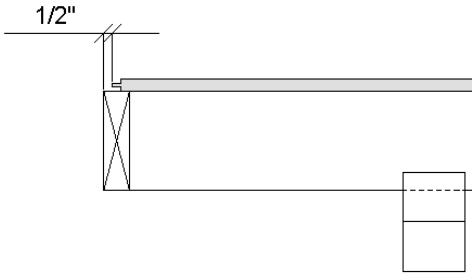

- **3/4" Advantech Flooring**
  - **ONLY USED IN GARAGES. (UNLESS CUSTOM ORDERED).**
  - Use 2 ½" Galvanized nails.
  - *Same nailing rules as 5/8" T&G Flooring*.

- **Recessed Diamond Plate Threshold**
  - All Diamond Plate Thresholds should be recessed below the floor sheathing.
  - Cut the flooring a ¼" wider than the width of the Threshold.
    - This will create a natural "weep" hole on each end of the plate for water drainage.
  - The flooring should always be setting on top of a Joist after it is cut back. Never allow the floor to float without support.
    - This is accomplished by adding additional joists or deadwood blocking.
      - Deadwood is used between each joist when the door is on the side of the building. Use a 2x4 block, laid flat and nailed between joists.

EXAMPLES:

5/8” T&G Pro-struct: (3/4” Flooring uses 2-1/2” Galv. Nails)

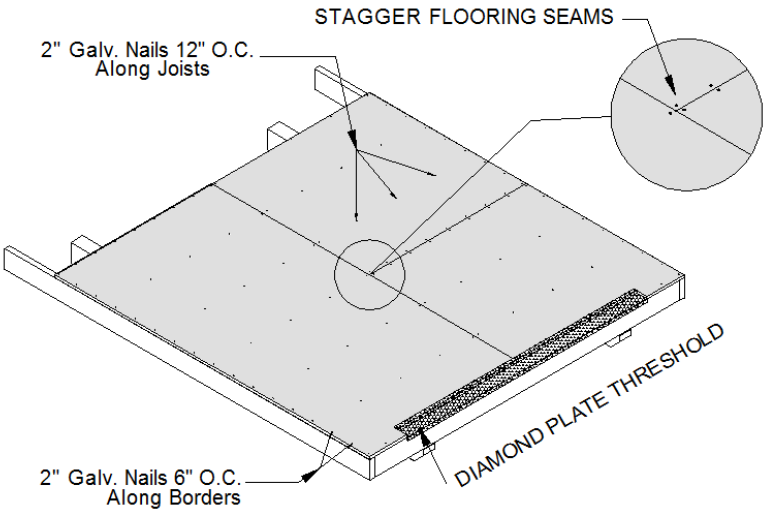

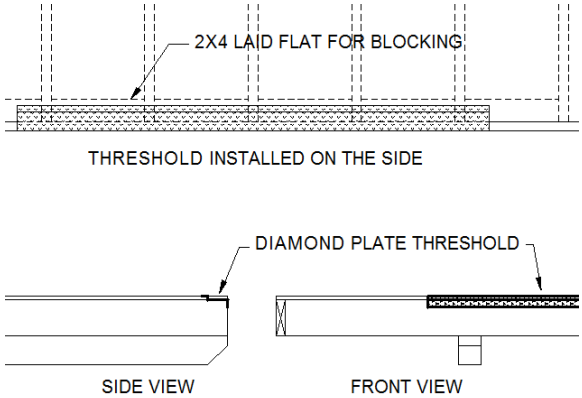

A. 4x6 Double Notched Skids (PT)
B. First End Joist (inside)
C. Second End Joist (outside)
D. Floor Joist
E. Rim Board (Rim Joist)
F. Drag Board
G. Splice Joist
H. Center Drag Board
I. Splice Filler
J. Splice Board
K. Joint Splice
L. Butt Joint
M. Skid Notches (Notches)

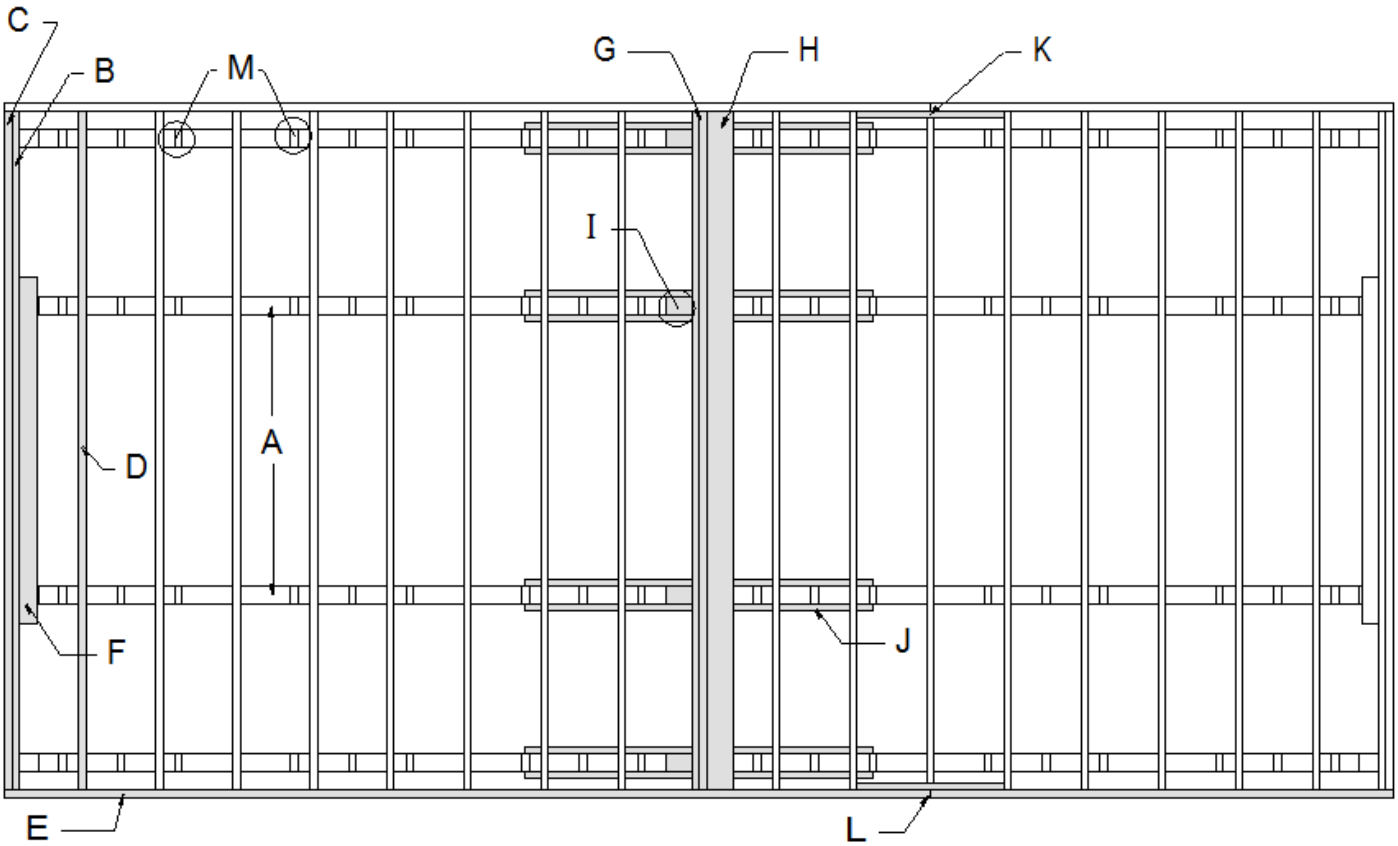

WALL SYSTEM:

- **2x4 Top and Bottom Plate; 2x8 Side Wall Top Plate**
  - Use 2x4 White Lumber for plate material. Use according to length and width of the building.
  - A 2x8 is used as the second top plate when double top plating any building. On the 'SIDE WALLS' ONLY.
    - Rip a 30 degree angle on the outer edge for all lofted buildings.
    - The top of the 2x8 should measure 5-1/4".
  - Turn any bad edges to the outside of the building and up or down out of view.
  - Always use the best face of material to be exposed.
  - Splice top and bottom plates together with 5 to 6 wide crown staples.
    - A 2x4 Scab may also be used between the studs.

EXAMPLES:

Plate Splice with Staples:

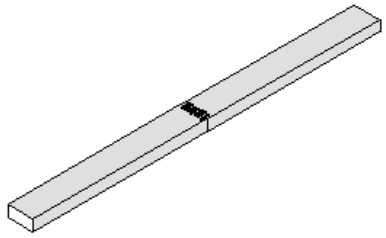

PLATE SPLICED WITH 5-7 STAPLES

Plate Splice with Scab:

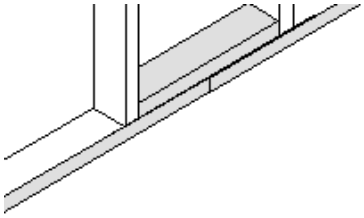

2X4 SCAB BETWEEN STUDS

Utility Double Top Plate :

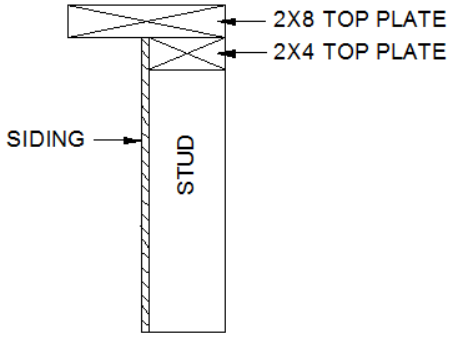

UTILITY STYLE

Lofted Double Top Plate:

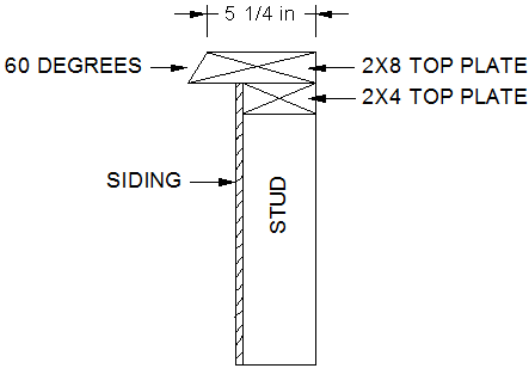

LOFT STYLE

- **2x4 Studs**
  - Use 2x4x75" studs for Lofted Barns, Lofted Cabins, and Economy Buildings.
  - Use 2x4x89" studs for Utility style buildings or extra height walls.
  - Studs are spaced on center as follows:
    - 16" o.c. for LP Siding and double studded every 4' feet for siding seams.
  - Double Stud corners on both End Walls.
  - ***<u>End Walls should extend to the edge of the rim board for max width.</u>***
  - Studs and plates are to be nailed together with 3" nails.
  - Use two - 3" nails in top and bottom plate for studs.
  - Use two - 3" nails to attach a double top plate at each point.
    - Second top plate nails are spaced on center over the studs.
  - Be sure the BEST SIDE of the stud is showing. Any bad edges should be facing outward and not visible.
  - Nail "Double Studs" with 3" nails, use 2 nails spaced approximately 24" o.c. or less on one side and split the difference on the opposite side. Angle nails about 30 degrees so they are not exposed on the back side.
    - Nail Double Studs together as tight as possible so a gap doesn't show between them.

- **Connecting Side Walls and End Walls**
  - Fasten corners together with 3” framing nails.
    - 2 – 3” nails approximately 12” o.c.
  - Be sure to get the corners tight together before nailing.
    - Check for Square-ness.

EXAMPLES:

Nailing Corners and Double Studs:

Double Top Plate with 2X8’S:

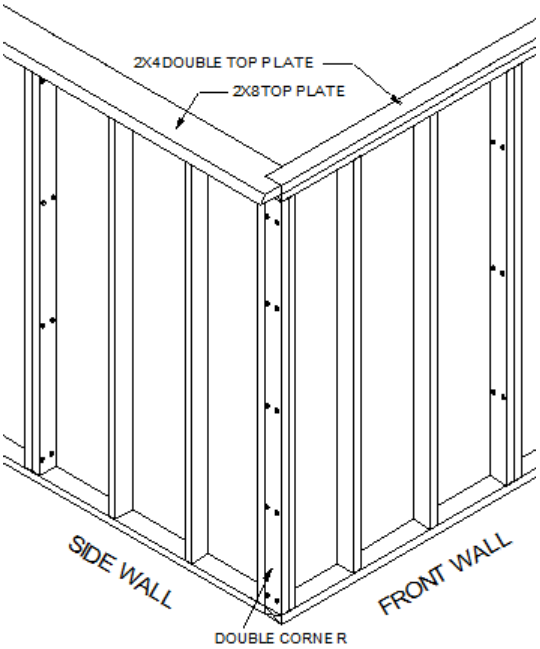

Notch the 2x8 Top Plate around the End Wall top plate as shown below.

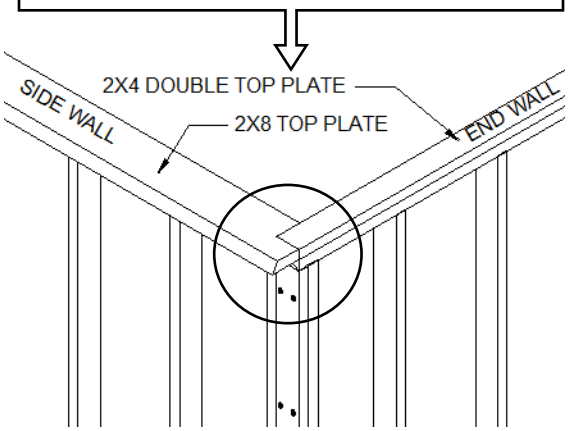

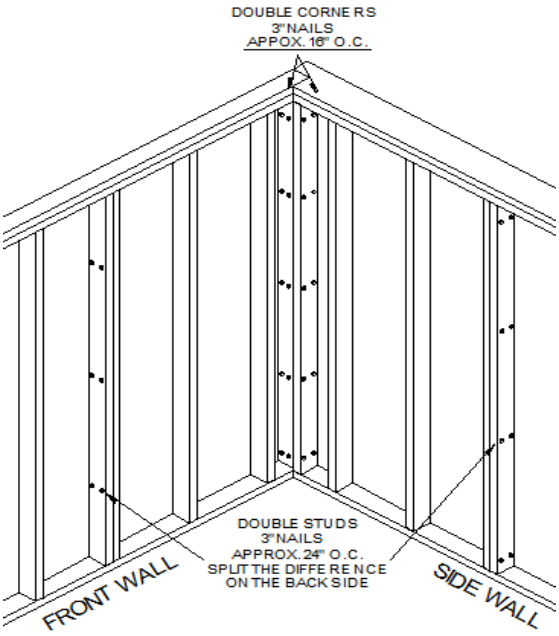

Nailing Double Studs:

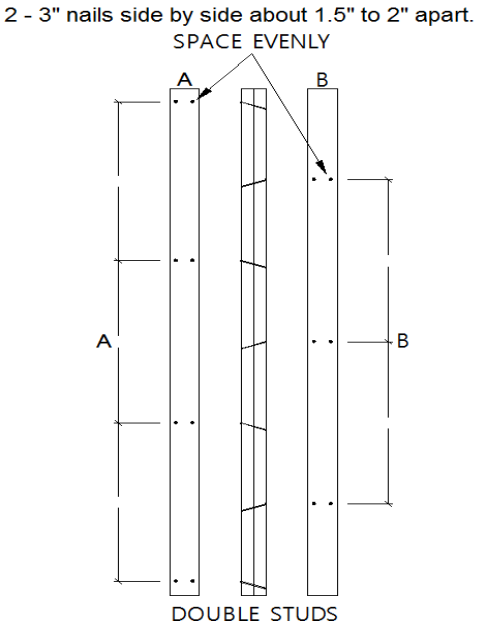

WINDOWS:

- **Window Framing**
  - Frame all window rough openings with a King Stud on each side.
  - All headers are to be made of two - 2x4's with an OSB "Flitch Plate" in between.
  - All headers are to rest on top of the Window "Jamb".
  - ***Window Header should match the Height of the Door Header on all Buildings.***
  - Bottom of the Frame is made with a 2x4 "Rough Sill". This will sit on the Cripples.
- **Window Rough Opening**
  - 2x3 window = 24 ½" W x 36" H
    - Header = 27 ½" Width
    - Jamb = 36" Height
    - Rough Sill = 27 ½" Width
  - 3x3 window= 36 ½" W x 36 ½" H
    - Header = 39 ½" Width
    - Jamb = 36 ½" Height
    - Rough Sill = 39 ½" Width

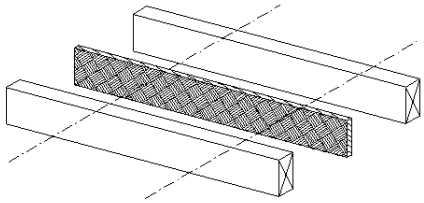

HEADER WITH FLITCH PLATE

DOORS:

- **Wood Door Frame Out**
  - Frame rough opening with 2 studs on each side of the opening.
    - 1 "King Stud" and 1 "Jack Stud" on each side.
  - Headers are to be made of two 2x4's, with an OSB "Flitch Plate" in between.
  - Headers are to rest on top of the Jack Stud.
  - Using 2x4's rip 1" strips for the door stop.
    - Door stop should be set back 1 5/8" from the outside of the rough opening to allow the door to close.
- **Single Door Rough Opening**
  - Lofted Building 4ft single door:
    - 48" W x 73" H; Header = 51" Width
    - Door Frame 47 ¼" x 72"
  - Utility Building 4ft single door:
    - 48" W x 78" H; Header = 51" Width
    - Door Frame 47 ¼" x 77"
  - Siding should extend 2" past the bottom of the frame.
- **Lofted and Side Lofted Barn Door Rough Opening**
  - **LEFT DOOR IS NON-ACTIVE**
  - **RIGHT DOOR IS ACTIVE**
  - **BOTH DOORS ARE THE SAME DIMENSIONS**
  - 6' Double Door Rough Opening:
    - 73" W x 73" H; Header = 76" Width
    - Door frames are 36" x 72" each.
  - Siding should extend 2" past the bottom of the frame.
- **Utility and Side Utility Door Rough Opening**
  - **LEFT DOOR IS NON-ACTIVE**
  - **RIGHT DOOR IS ACTIVE**
  - **BOTH DOORS ARE THE SAME DIMENSIONS**
  - 6' Double Door Rough Opening:
    - 73" W x 78" H; Header = 76" Width
    - Door frames are 36" x 77" each.
  - Siding should extend 2" past the bottom of the frame.

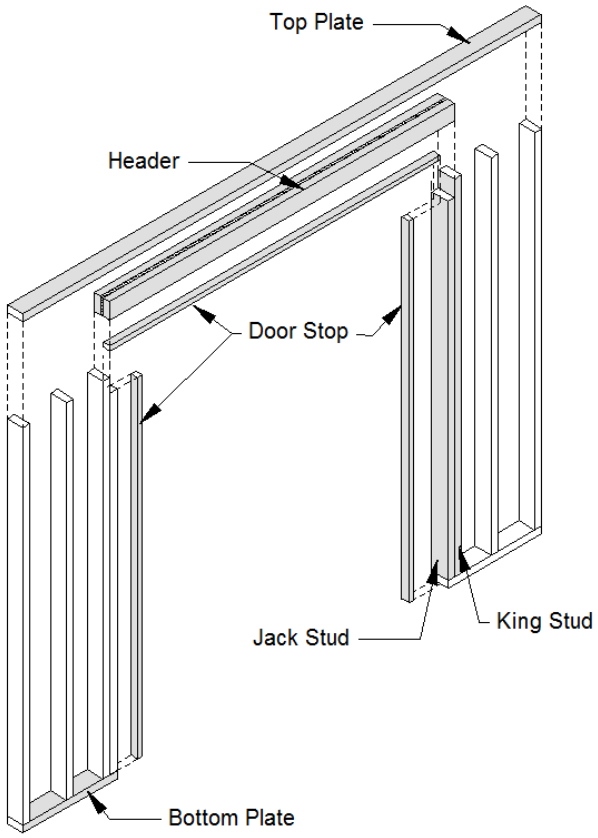

EXAMPLE:

A. SIDE RAILS

B. TOP RAIL

C. MIDDLE RAIL

D. BOTTOM RAIL

E. VERTICAL BRACE

F. TRANSOM SILL

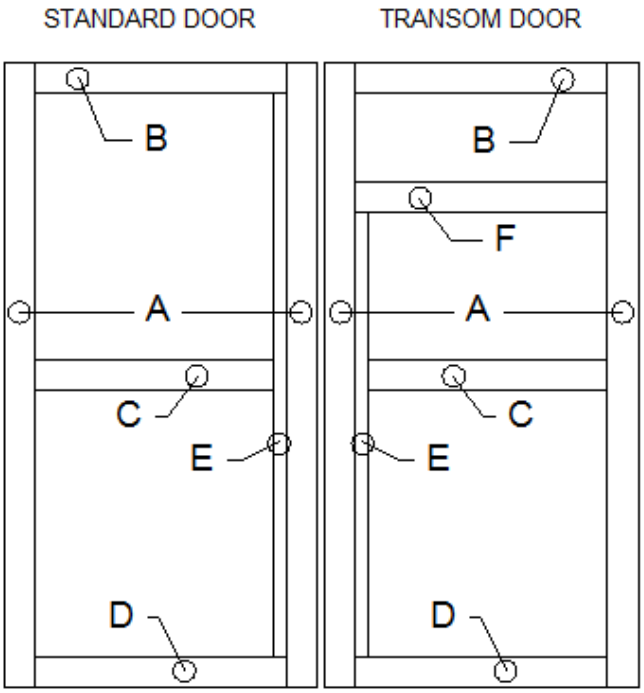

"VERTICAL BRACES ARE INSTALLED AT THE 'CLOSING POINT' OF THE DOOR. THE CLOSING POINT IS WHERE THE T-HANDLE IS INSTALLED AND THE 'CLOSING TRIM' OVERLAPS."

EXAMPLES:

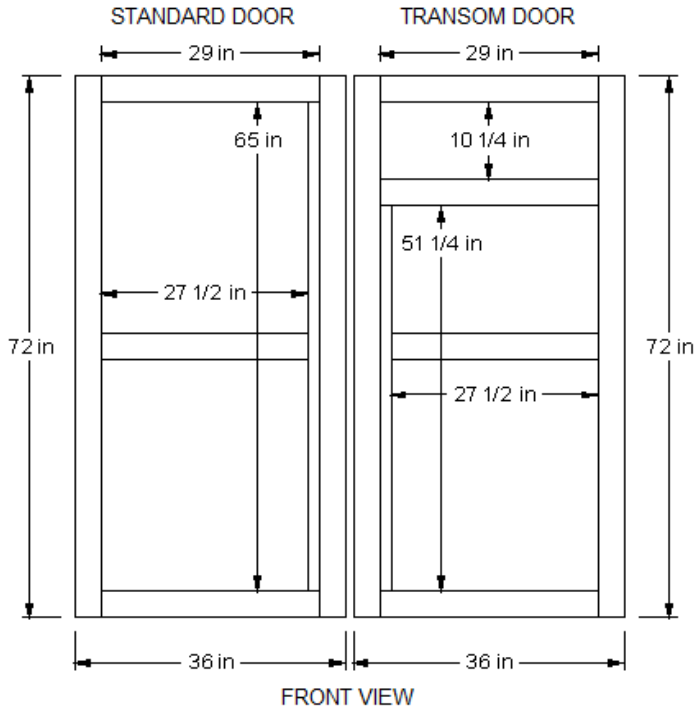

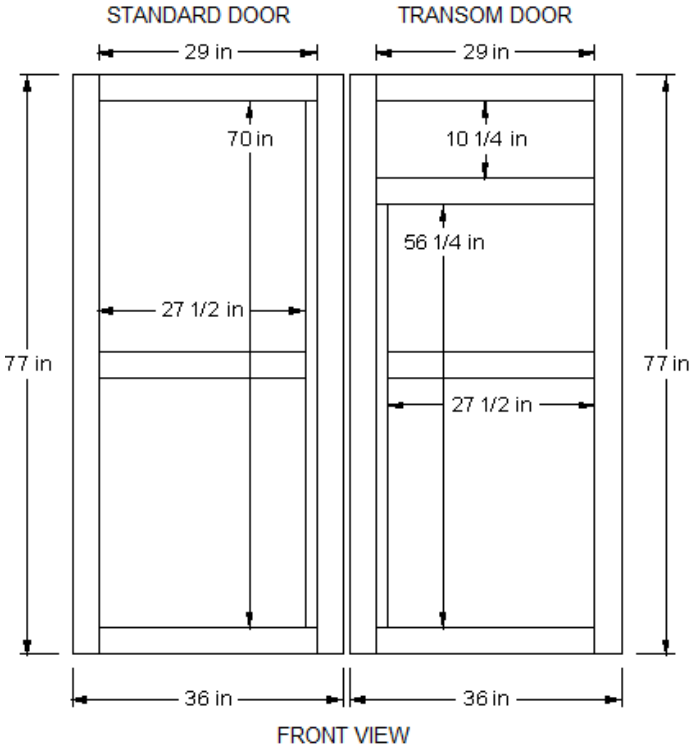

- **Door Trim**
  - Door trim should be cut to match the door frame layout.
  - The trim will follow the same as the framing pattern
  - Angled corner trims are cut as follows:
    - 12” on the long side, with a 45 degree angle on each end.
  - Install one in each of the outer corners.
    (THE HINGE SIDE OF DOOR)
  - The ‘Closing Trim’ is attached to the Active Door.
    - Allow no more than 1 ¾” to hang past the edge.

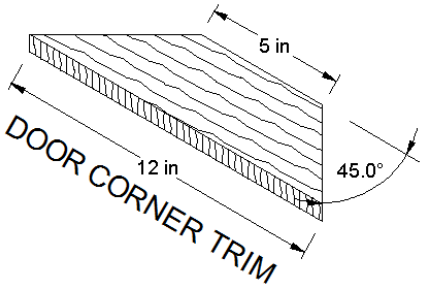

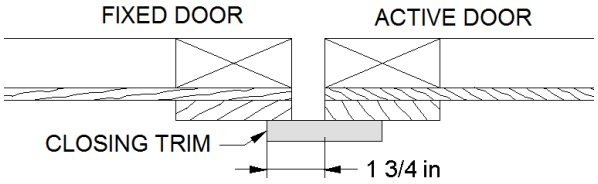

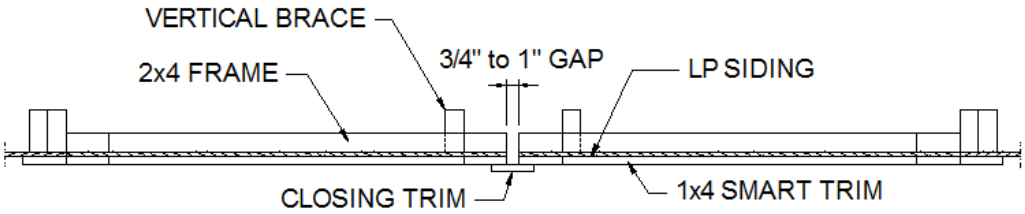

EXAMPLES:

STANDARD DOORS

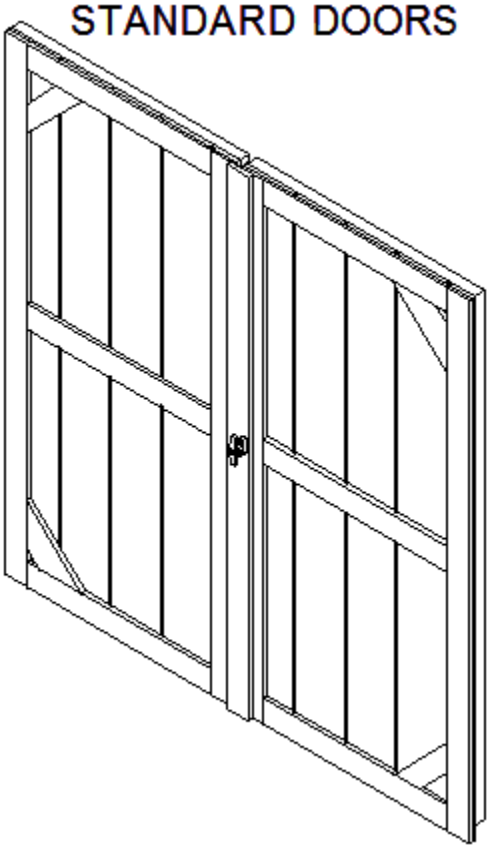

TRANSOM DOORS

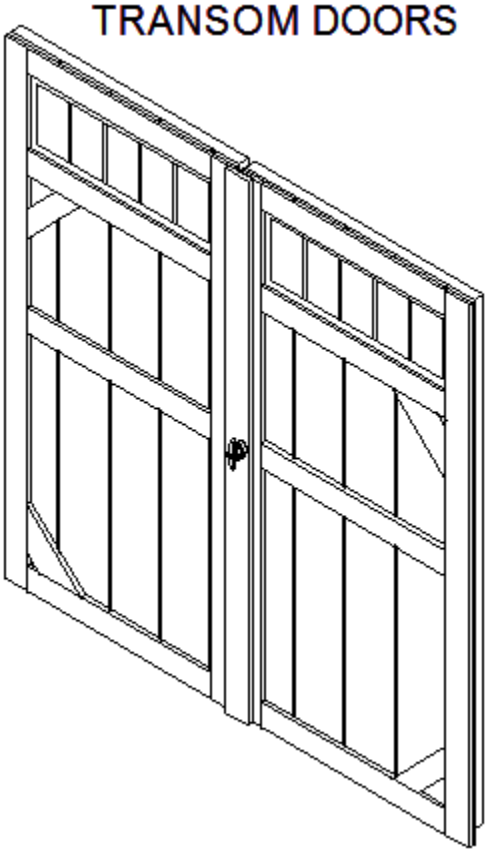

- **36” Pre-Hung Door Frame**
  - Frame rough opening with 2 studs on each side.
    - 1 “King Stud” and 1 “Jack Stud” to each side of the opening.
  - Headers are to be made of two – 2x4’s with an OSB “Flitch Plate” in between.
  - Headers are to rest on top of the Jack Stud.
- **Rough Opening for 36” Pre-Hung Door**
  - Short Pre-hung door = 38” W x 73” H
    - Header = 41” Width
  - **Add ½” to the rough opening height for doors being installed on a Cabin Porch (WHEN POSSIBLE).**
  - Tall Pre-hung door = 38” W x 81” H
    - Header = 41” Width
  - **Add ½” to the rough opening height for doors being installed on a Cabin Porch.**

- **Door and Window Trim**
  - The top trim over the doors and windows is to be cut as follows:
    - The bottom of the trim should be flush with the outside of the side trim.
    - Cut a 30 degree angle on each of the trim.
    - Measure in from each end approximately 5/8”; then measure down 1” and cut the tip of the angle off. (SEE PICTURE)
  - This should leave the top of the trim approximately 3” wider than the bottom.

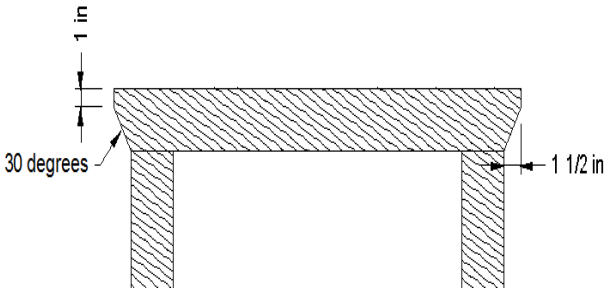

****** THIS IS TO BE DONE OVER THE TOP OF EVERY DOOR AND WINDOW ******

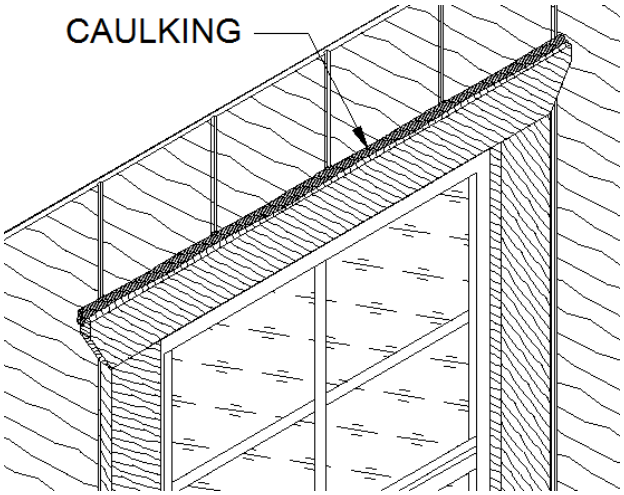

******CAULK THE TRIM ABOVE ALL EXPOSED WINDOWS AND DOORS******

Wall Components and Rough Opening Layouts:

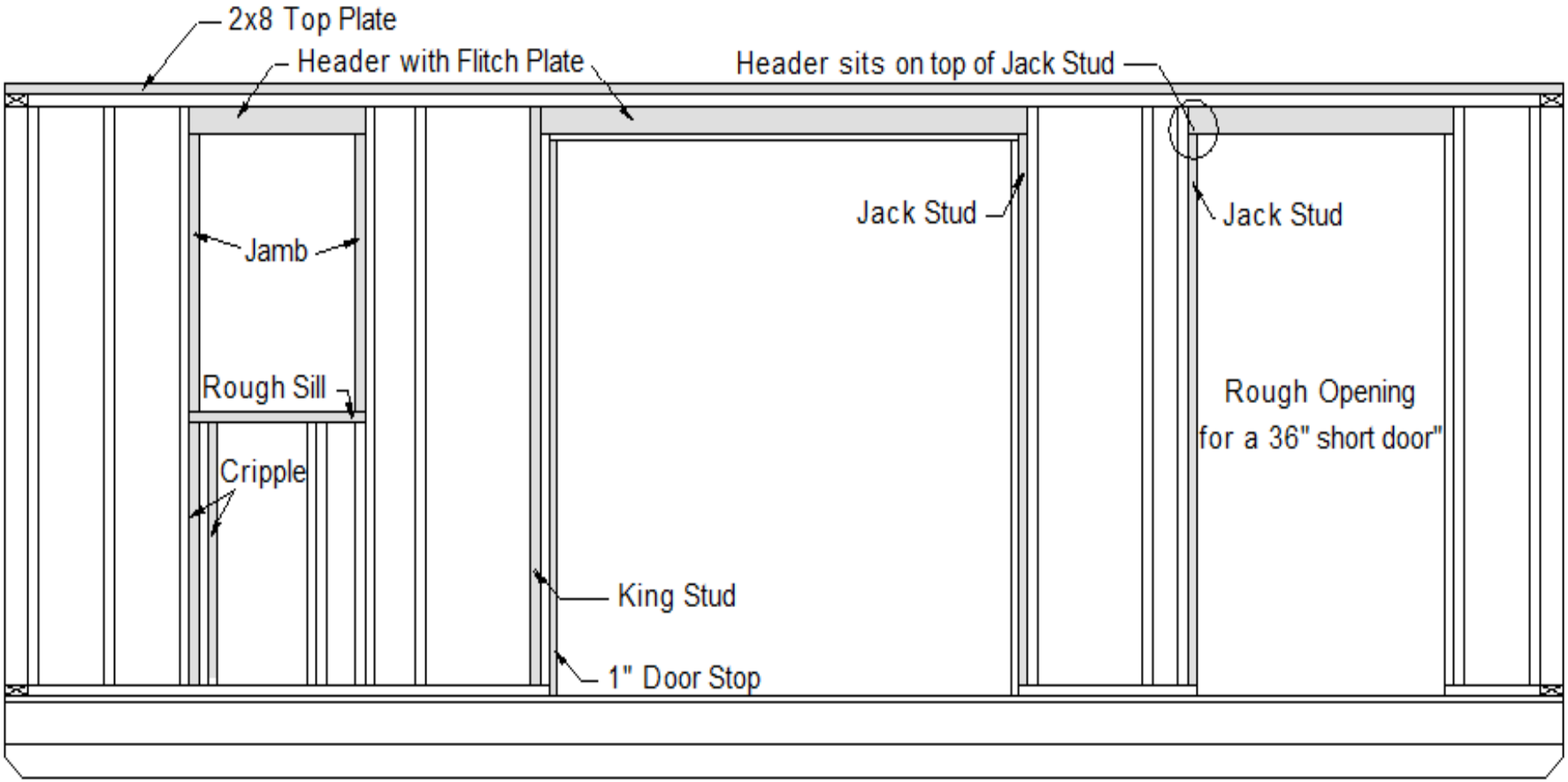

- **End Wall Construction:**
    - The End Wall is constructed into one piece with the Gable Truss.
    - **BE SURE TO START THE GABLE TRUSS OVERHANGING 3/8".**
        - This will allow the siding on the gable to overlap the wall siding below.
- Lofted Buildings
    - The Gable Truss has a "Gable End Loft Joist" and "Gable Studs".
        - Gable Studs are fastened to the truss with 1" Wide Crown Staples and Fastened to the Gable End Loft Joist with 3" nails.
            - 4 to 6 - 1" Wide Crown Staples at the top to fasten to the truss.
                - Or you use a 2 – 3" nails to Toenail into the truss.
            - 5 – 3" nails at the bottom to fasten to the Gable End Loft Joist.
        - Gable Studs should be on center with the studs on the wall below them.
- Utility Buildings
    - The Gable Truss will have the "Gable Studs" installed.
        - Gable Studs are fastened to the truss with 1" Wide Crown Staples and Fastened to the Gable End Loft Joist with 3" nails.
            - 4 to 6 - 1" Wide Crown Staples at the top to fasten to the truss.
                - Or you use a 2 – 3" nails to Toenail into the truss.
            - 5 – 3" nails at the bottom to fasten to the Gable End Loft Joist.
        - Gable Studs should be 4ft on center, lined up with the siding seams.

EXAMPLES:

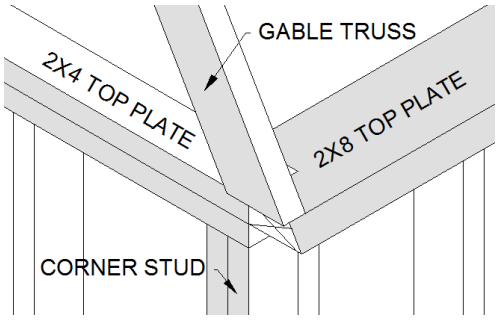

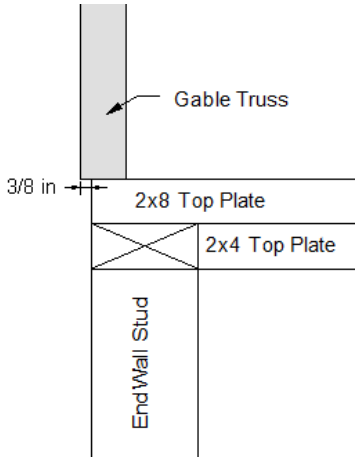

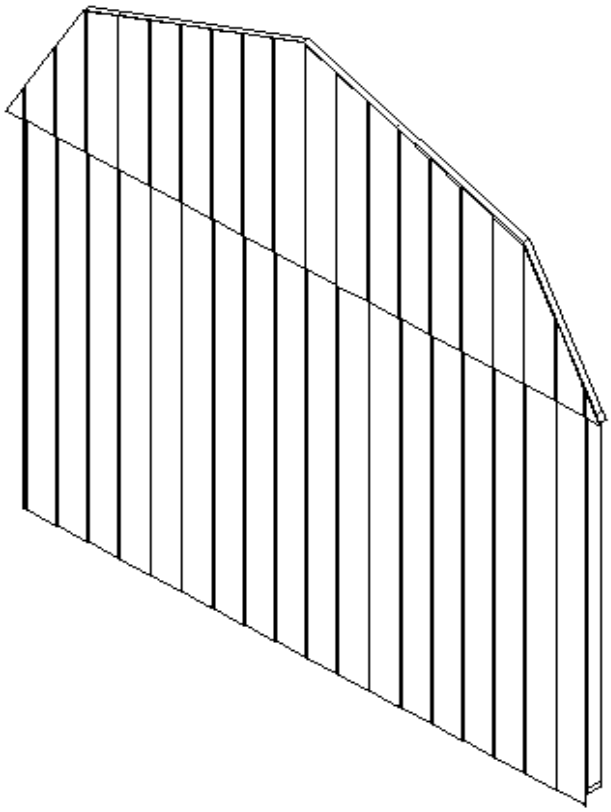

- **Fastening Walls to the Floor:**
  - Use 3” Framing nails.
    - 2 Nails between each stud. Get close enough to the siding that the nail will penetrate the Rim Board below.

EXAMPLES:

Wall to Floor:

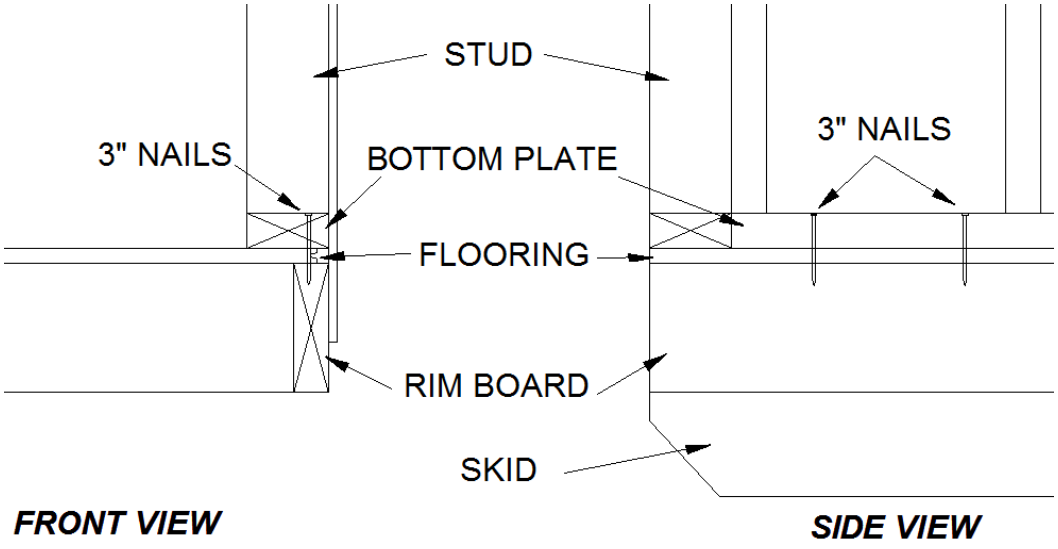

WALL SHEATHING:

- **Siding Application**
  - Material:
    - 3/8” LP Smartside (Studs 16” o.c. & double stud every 4’).
  - Always start with a full sheet to help square the wall.
    - ***Remove the ¾” overlap from the first sheet along the first stud on the end of the wall.*** This will align your studs for proper nailing.
  - Buildings with 89” studs:
    - Use the full 8’ sheet on the side walls to get alignment.
  - Buildings with 75” studs:
    - Drop siding 4” below the bottom plate of the wall to get alignment.
  - Nailing Pattern: 2” galvanized nails for all siding.
    - 6” o.c. on Corners and Overlaps.
      - Place nail 1” from edge when nailing an Overlap seam. 6” o.c.
    - 12” o.c. in the field along the studs and Underlap.
      - Place nail approximately 3/4” from the edge of the groove to ensure you hit the center of the stud. 12” o.c.
      - When nailing the Underlap, place nails on the outside of the Alignment Bead. 12” o.c.
  - Top and Bottom row of nails should be nailed to following pattern:
    - One nail approximately 1” from the groove on each side and approximately 1” to 1 ½” from the edge.
  - Nail 6” o.c. around all Door and Window rough openings.

***** Do Not Drive Nails Too Deep *****

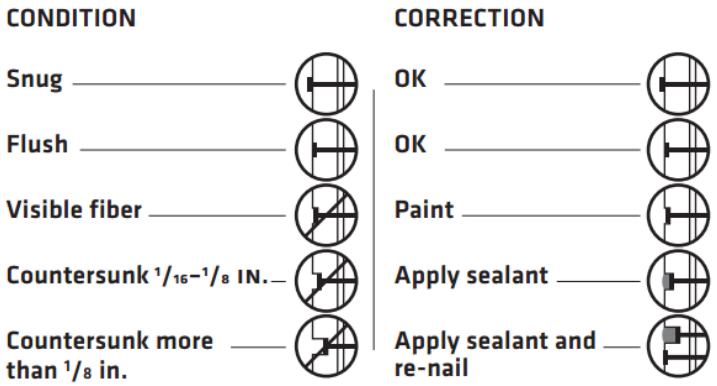

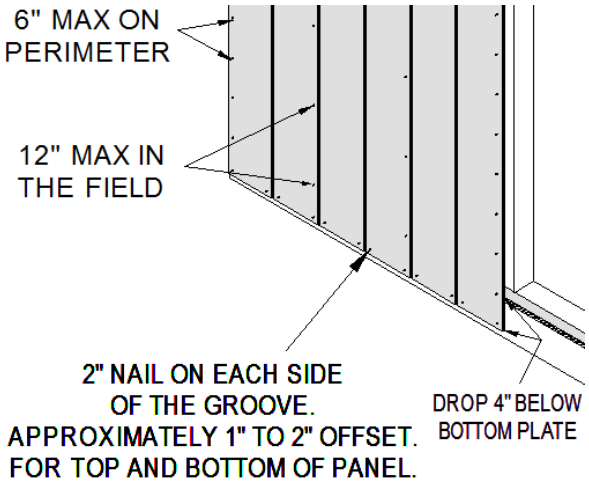

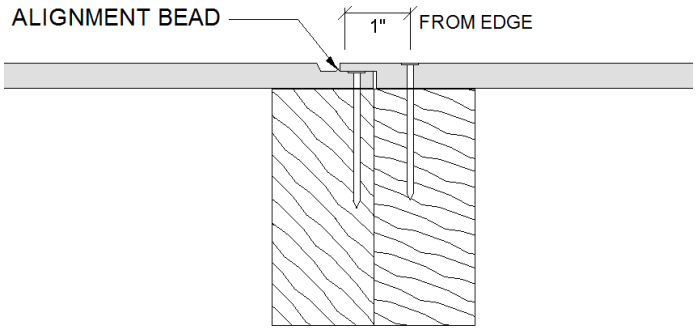

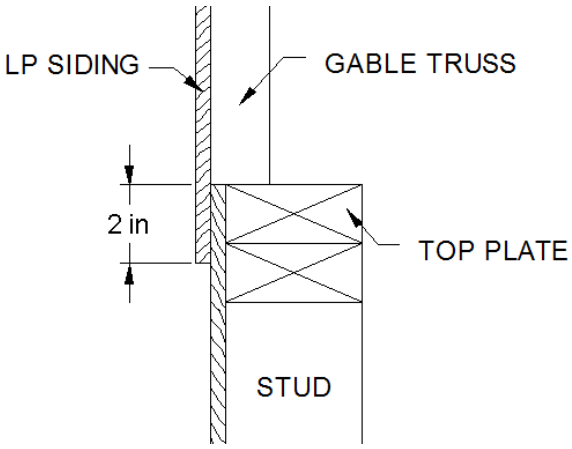

- **GABLE OVERLAP:**
  - The siding on the gable of the end wall should overlap 2” past the top of the end wall siding.

- **Trim Application:**
  - Use 2” Galvanized nails.
    - Fasten with 2 nails spaced no less than 12” o.c. and no more than 18” o.c.

EXAMPLES:

Trim Nailing Pattern:

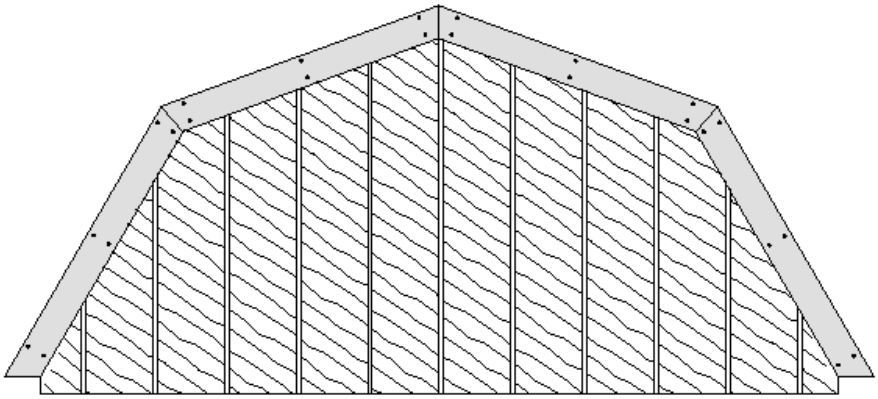

Trim Nailing Pattern

Space nails no less than 12" o.c and no more than 18" o.c.
Start at Least 1" from the end. Use 2 - 2" Siding Nails.
Keep nails parallel.

ROOF SYSTEM:

- **Trusses**
  - Trusses are 24” on center for 8, 10, & 12 wide buildings.
    - 14’ and 16’ wide buildings are 16” on center.
- **Lofted Truss and Loft Joists**
  - The Lofted Truss should run flush with the outside of the Top Plate.
  - Use 3” nails to toenail the trusses to the top plate.
    - Two nails on each side.
      - Be sure to put enough angle so the nail isn’t exposed on the opposite side.
    - Watch for nails sticking through on the top plate. We want to avoid this.
  - Trusses are also fastened with Hurricane Truss Screws. They are installed from the bottom side of the top plate.
    - If the truss is over a double stud then use a 6” truss screw. It will have to be angled slightly.
    - If the truss is between studs then use a 4 ½” truss screw.
  - Loft Joists are fastened with 3” nails.
    - Use 5 nails in an alternating pattern to fasten to the truss.
      - Use 2 toenails to fasten the Loft Joist to the top plate of the wall.
  - Do not toenail both sides of the truss when it has a loft joist. Only toenail the exposed side, not the side the Joist will be fastened to. This will prevent issues with gaps between the truss and loft joist.

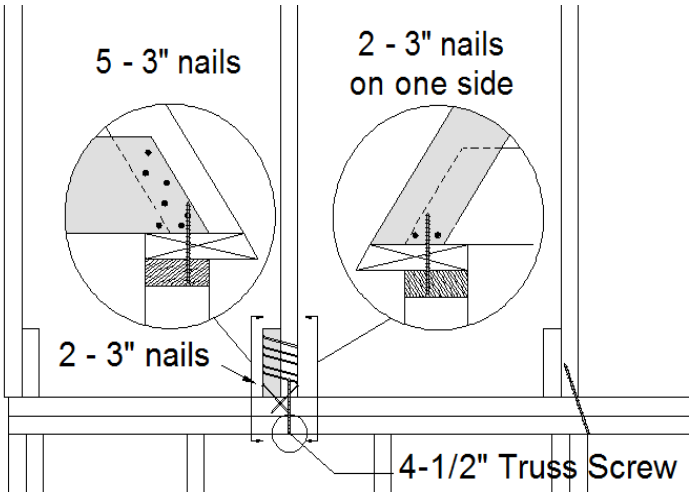

- **Utility Trusses**
  - The Utility Truss should be flush to the outside of the Top Plate.
    - It can be a little short of the edge, but *MUST NOT* hang past the outer edge of the top plate.
  - Use 3” nails to toenail the trusses to top the top plate.
  - Trusses are also fastened with Hurricane Truss Screws. They are installed from the bottom side of the top plate.
    - If the truss is over a double stud then use a 6” truss screw. It will have to be angled slightly.
    - If the truss is between studs then use a 4 ½” truss screw.

EXAMPLES:

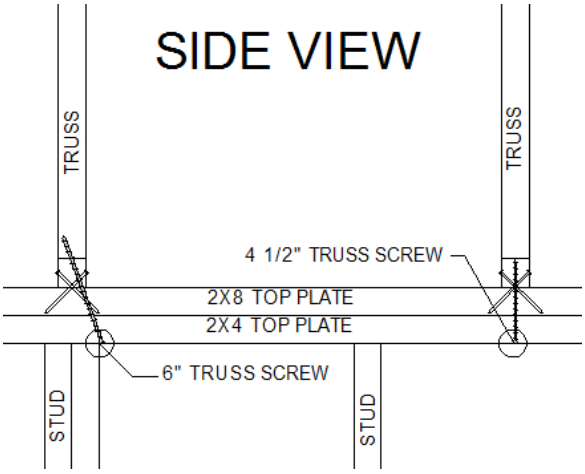

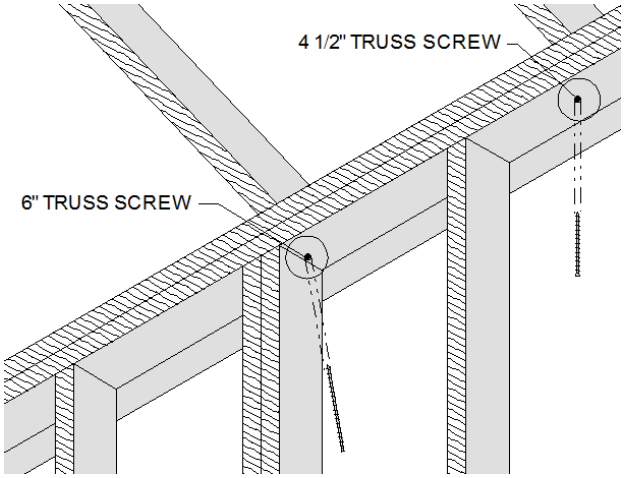

- **Hurricane Clips**
  - Standard Rated Buildings:
    - 6” Hurricane Clips are to be installed on each truss where it is over a double stud (every 4’), or basically every other truss.
      - Fasten with Positive Placement nails. 4 nails in top and 4 nails in bottom.
  - Wind Rated Buildings:
    - 6” Hurricane Clips are to be installed on every other truss *not* over a double stud. (every 4’).
      - Fasten with Positive Placement nails. 4 nails in top and 4 nails in bottom.
    - 12” Hurricane Clips are to be installed on every other truss that is over a double stud (every 4’).
      - Fasten with Positive Placement nails. 7 nails in top and 7 nails in bottom.
      - 12” clips may have to be bent backward in order to fit properly.
  - Hurricane Clip Installation rules:
    - Always be sure the Blade of the Hurricane Clip is above the Top of the Top Plate.
    - Always try to face the Blade of the clip outward toward the wall.
      - Be sure the Blade is above the Top of the Top Plate when it’s not possible.
    - It doesn’t matter if the clip is attached to the Truss or the Loft Joist; whichever works the best for installation and allows you to follow the rules is the correct method.

EXAMPLES:

Hurricane Clips:

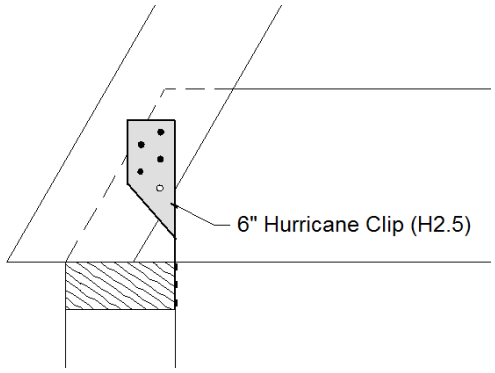

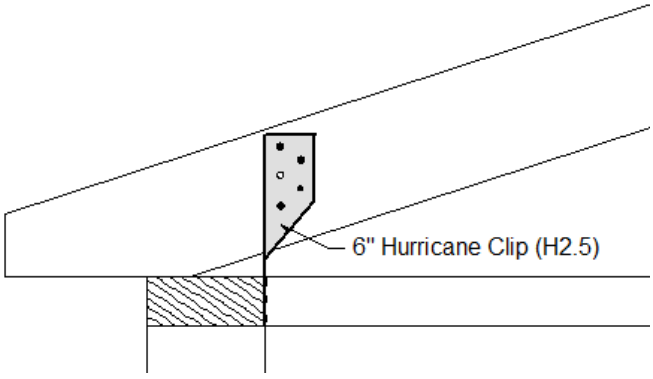

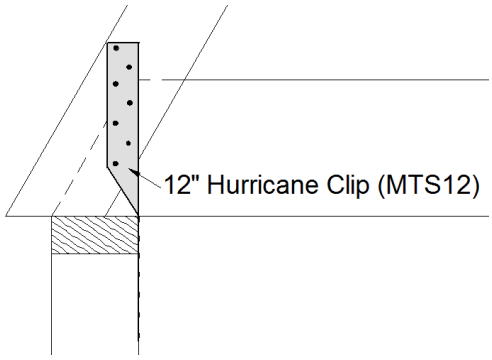

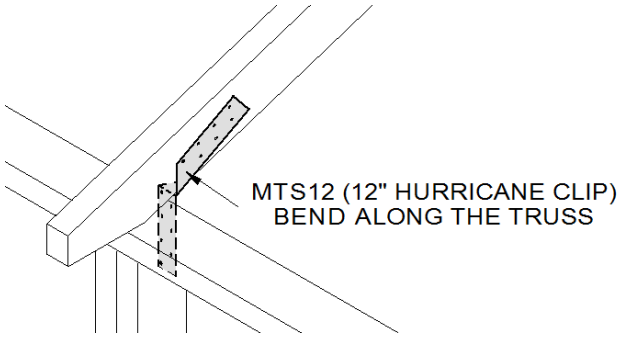

- **Roof Decking**
  - 7/16" OSB is used for the roof decking.
  - Start OSB at the very top of the Ridge. There should be no gap.
    - Be sure to run felt paper down the ridge.
  - Stagger seams of the OSB to add strength.
  - Use 2" nails to fasten OSB to the trusses
    - Nail seams 6" o.c.
    - Nail the field 12 o.c.
  - For Lofted Barns, be sure there is no gap at the pitch transition on the truss.
    - Be sure run felt paper down the pitch transition.

- **Roof Metal Installation**
  - **Start metal 2" down from the Ridge.**
  - ¾" Roof Screws **(*Impact or Hammer Drills are NOT Recommended for Installation of Metal).***
    - Minimum of 3 Rows of screws per panel.
      - Some may require 4 Rows.
    - Place one Screw on each side of all Overlapping Ribs.
    - Bottom Row:
      - One Screw on each side of the Overlapping Ribs.
      - One Screw next to each rib. Screws should be on the Underlapping side of the Rib.
    - Intermediate Row:
      - One Screw on each side of the Overlapping Ribs.
      - One Screw next to the Center rib. Screws should be on the Underlapping side of the Rib.
    - Top Row:
      - One Screw on each side of the Overlapping Ribs.
      - One Screw next to each rib. Screws should be on the Underlapping side of the Rib.
    - Rows should not be more than 30" apart. As previously stated, all panels have a minimum of 3 rows of screws.
      - The following roof styles will require 4 rows of screws:
        - 12' and wider Utility, Cabin, or Garage style roofs.
        - 14' and wider Lofted style roofs.
      - Be sure that all rows are evenly spaced.
  - Metal Rake Trim:
    - Install with ¾" roof screws.
      - Screws should be in line with the Screws on the roof panels.
  - Ridge Cap:
    - Install with ¾" roof screws.
    - One screw in every Rib of the roof panel one each side of the Ridge Cap.

EXAMPLES:

SCREW PATTERNS

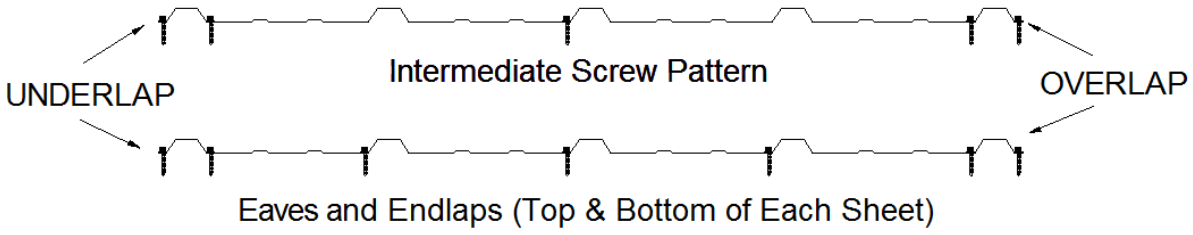

EXAMPLES:

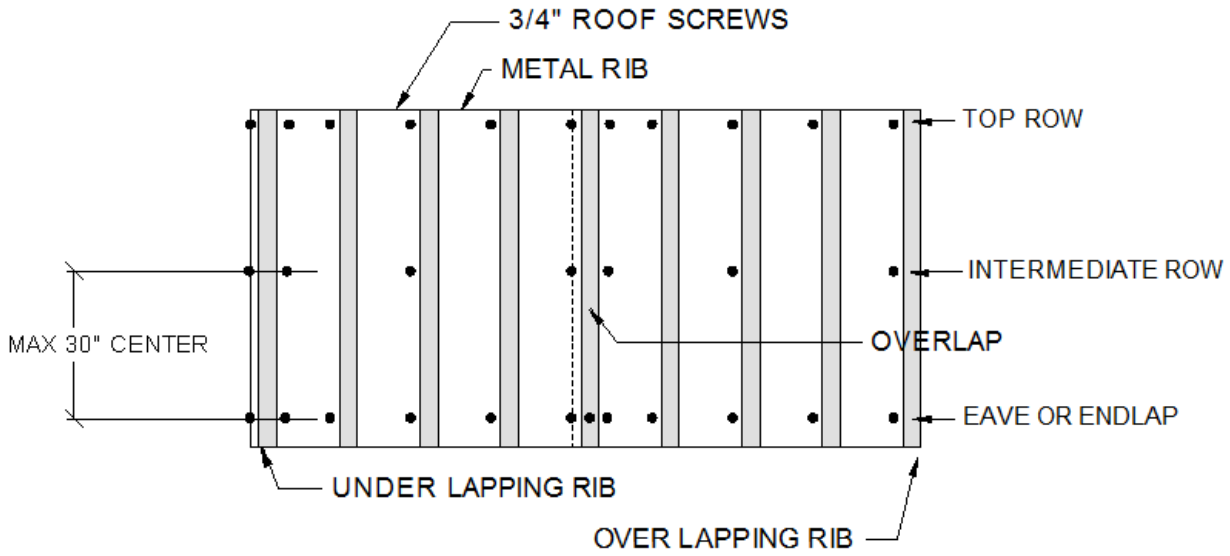

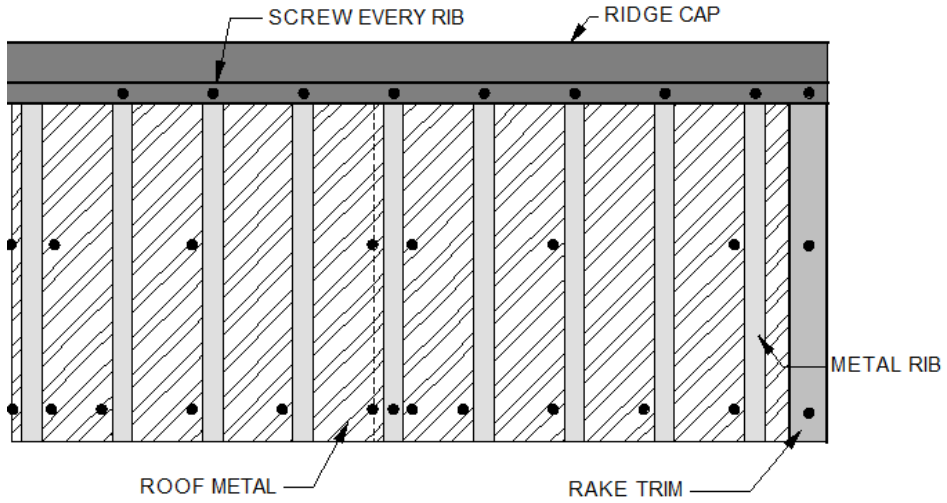

- **Ridge Cap Ends:**
  - Leave approximately 1” to 1 ½” at each end of the Ridge Cap.
    - Cut to fit, and then fold the end over to cover the gap.
      - Be sure the fold is tight enough that the metal doesn’t stick out.
      - Cover all gaps.

EXAMPLES:

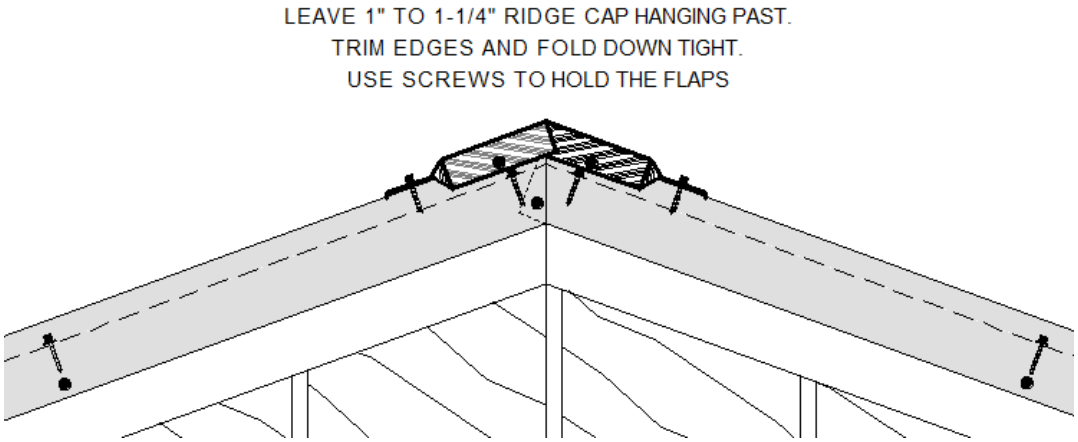

CABIN PORCHES:

- **Cabin Porches:**
  - 5/4x6x12 Pressure Treated Deck Boards are used on the porches.
    - Fasten with 2 ½" QUICK DRIVE screws.
      - 2 screws per joist.
        - Try not to expose the Mill Stamps and any Paint marks when possible.
      - Keep the woodgrain turned down on the deck boards when possible.
  - Porch posts are 4x6x8 #1 Pressure Treated.
    - Install with 4" GRK Screws.
      - Two at the top and bottom.
        - Install on 3 ½" face of the post.
  - Treated Porch Plate.
    - Use 2x4x10 #1 PT.
      - You should be able to get some of these from porch railing cut offs.
    - Fasten with 2 ½" galvanized nails.
    - These should be installed between each post and nailed to the 2x4 top plate from the underneath side.
  - 4x6 Gussets are cut with a 45 degree angle on each end at 20" in length.
      - Install Gussets on each side of the posts.
    - Most of these can be used from scrap 4x6x8 posts.
    - Fasten with 4" GRK Screws.
      - 1 at the top and 1 at the bottom.
        - Be sure to pull them up tight.

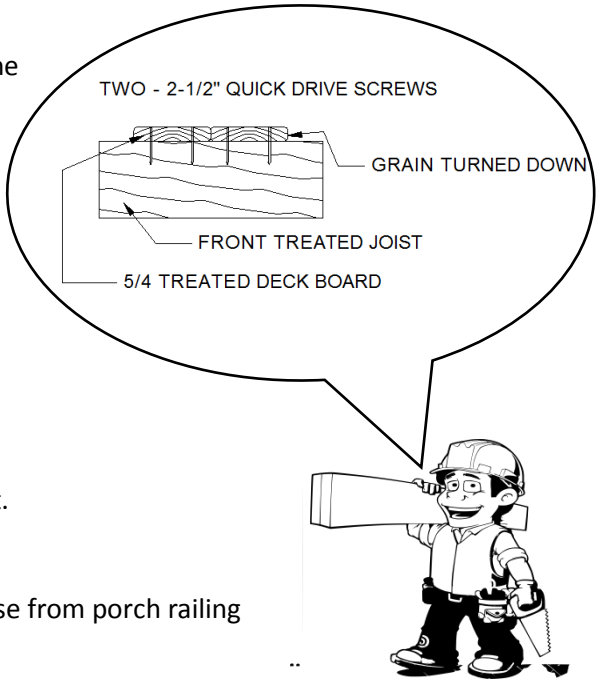

EXAMPLES:

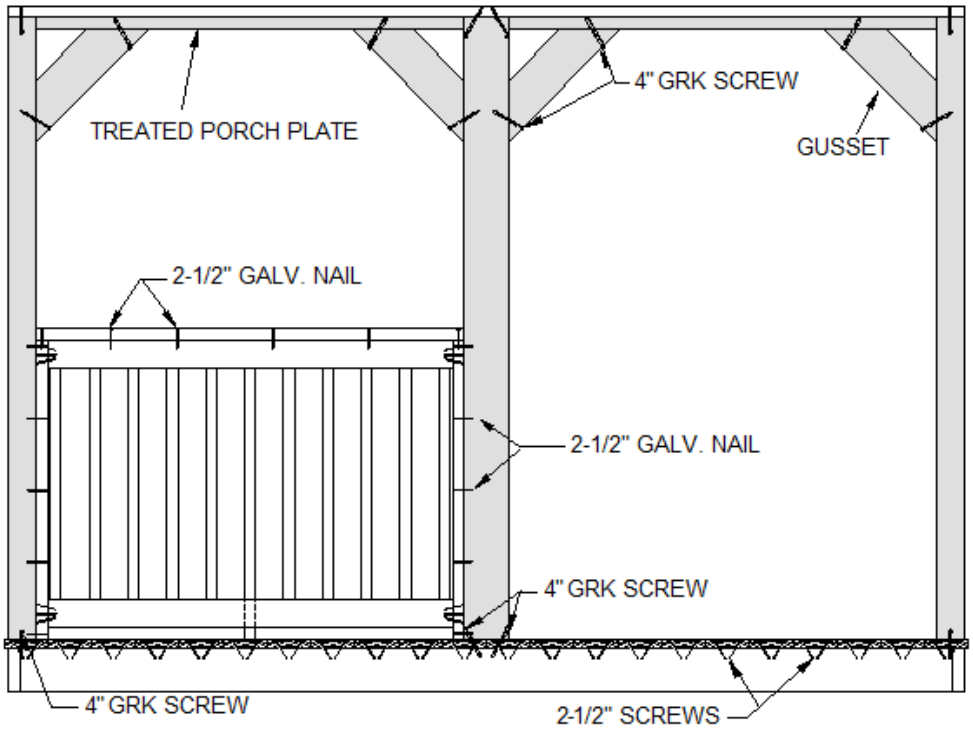

- Porch Railing is constructed with 2x4x12 #1 Pressure Treated and 2x2x36” Pressure Treated Spindles.
  - Railing components consist of:
    - Hand Rail – 2x4 Laid flat on the very top.
      - The Hand Rail spans the entire length of the Rail System and is nailed into the Top Rail and Side Rails.
    - Top Rail – 2x4 turned on its side and located directly below the Hand Rail.
      - This is what the top of the Spindles will be nailed to.
    - Bottom Rail – 2x4 turned on its side and located at the bottom of the Rail System 1 ½” above the porch decking.
      - This is what the bottom of the Spindles will be nailed to.
    - Side Rails – 2x4 placed vertically on the sides.
      - These are the frame of the Railing System and are nailed to the wall or post.
    - Center Spindle – 1 ½” PT spindle cut from a 2x4 that reaches from the bottom of the Hand Rail and sits on top of the porch decking.
    - Spindles – 2x2x36” PT spindles that are pre-cut with an angle on each end. These are placed vertically
- Use 2” to 2 ½” Galvanized Nails to fasten porch railing together.
  - Prebuild porch railing to fit between the post and wall.
    - The railing should butt up to the siding, be sure the Corner Trim is cut out for the railing to fit underneath.
  - Before using Spindles: **REMOVE ALL TAGS AND STAPLES PLEASE.**
    - Spindle spacing should not exceed 3 ½” between them.
    - The bottom of the spindles should be flush with the bottom rail.
      - Spindles should never be hanging past the bottom rail.
  - The “Center Spindle”:
    - Cut the Center Spindle out of a PT 2x4x10.
      - Rip the board at 1 ½” and approximately 38 ¾” long.
        - The Center Spindle should reach from the bottom of the Hand Rail down to the 5/4” PT Deck Board.
  - Use 2 ½” Galvanized nails to attach the Porch rails to the walls and posts. **NO SCREWS!**

Porch Railing Components:

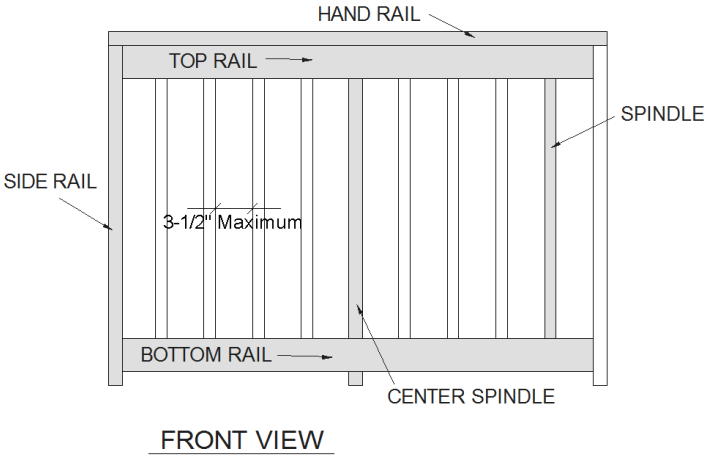

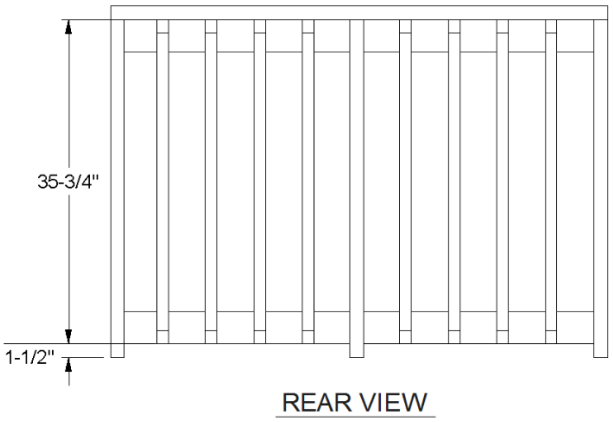

- **Vent Installation:**
  - Vents are to be installed as follows:
    - Hole cut-out is 8” wide by 10-1/4” high.
  - Utility Style Roof for 8 & 10 wide:
    - Construct a U- shaped frame from scrap 2x4’s leaving 8” x 10-1/4” on the inside of the frame.
      - Use 1” wide staples to construct the frame. Three staples on each side of the seam.
    - The vent frame should be installed in the gable end of the buildings.
    - Attach the vent frame to the bottom chord of the gable truss, with the missing side down. (See Picture).
    - The frame will sit on top of this 2x4 bottom chord.
  - Lofted Style Roof all sizes and Utility Style Roofs 12ft and wider:
    - Construct a square frame from scrap 2x4’s leaving 8” x 10-1/4” on the inside of the frame.
      - Use 1” wide staples to construct the frame. Three staples on each side of the seam.
    - The vent frame should be installed in the gable end of the buildings.
    - Measure 12” down from the peak. This will be top of the hole cut out.
    - Install the frame into the gable end of the wall and cut out the hole in the siding. Then install the vent in the frame.

EXAMPLES:

LOFTED STYLE:

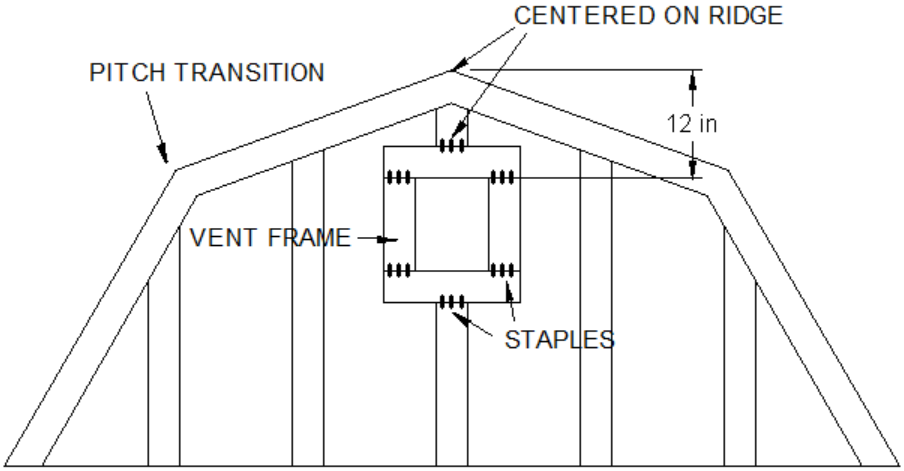

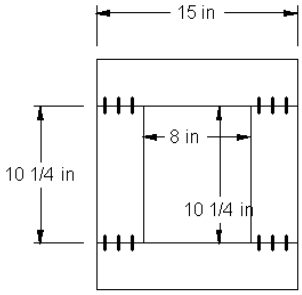

VENT FRAME

UTILITY STYLE: 8ft and 10ft wide only!

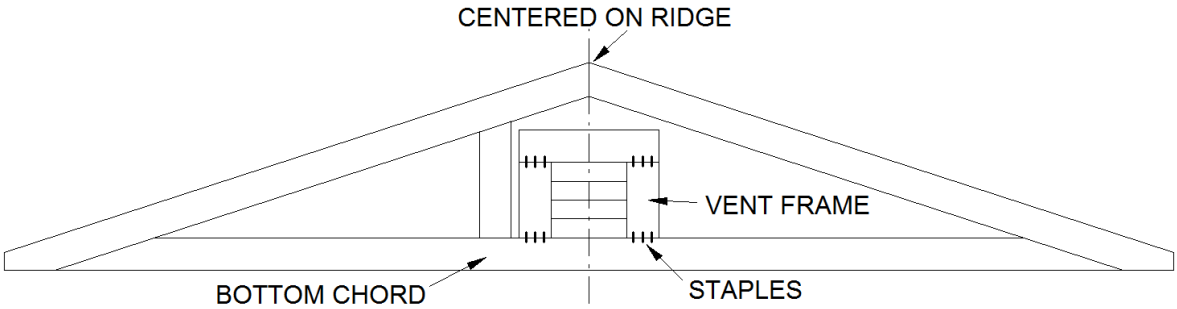

- **WORKBENCH:**
  - Cut to the appropriate width and make 24” deep.
  - The Workbench frame is a total height of 36” before the top is put on it.
    - 18” from the floor to the top of the first frame.
    - 18” from the top of the first frame to the top of the second frame.
    - 2x4 bracing 24” o.c.
    - Use 2x4’s for the front support legs. Run all the way to the top of the workbench.
    - Cut the top at a 45 degree angle.
    - One on each end and one in the center.
    - 14’ and longer workbenches will have 2 support legs spaced evenly between the end support legs.

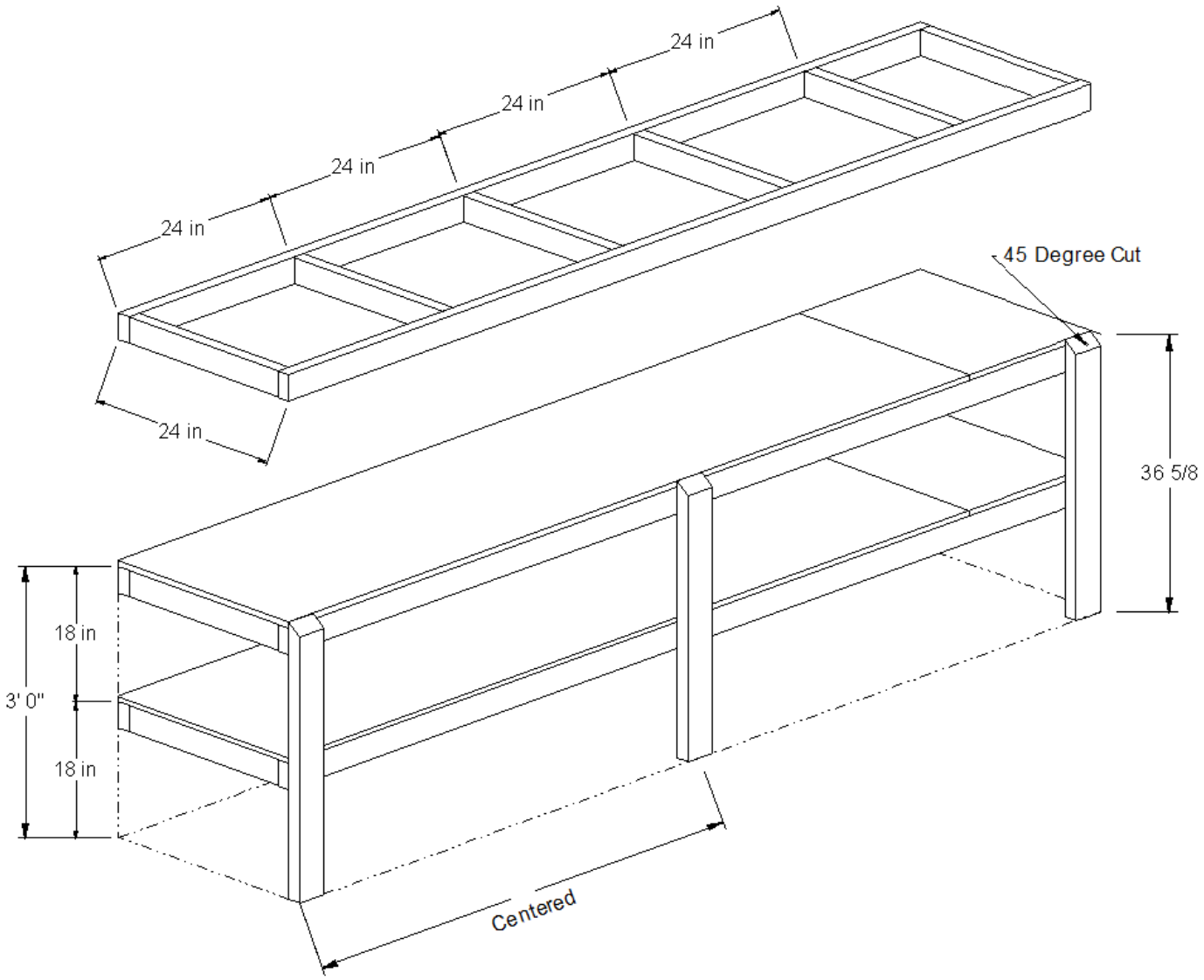

- **3-TIER SHELVES:**
  - Cut to the appropriate width and make 16” deep.
  - The 3-tier shelf frame is a total height of 60” before the top is put on it.
    - The first shelf is 20” from the floor to the top of the first shelf frame.
    - The second shelf is 20” from the top of the first shelf frame to the top of the second shelf frame.
    - The third shelf is 20” from the top of the second shelf frame to the top of the third shelf frame.
    - 2x4 bracing 48” o.c.
    - Use 2x4’s for the front support legs. Run all the way to the top of the workbench.
    - Cut the top at a 45 degree angle.
    - One on each end and one in the center.
    - 14’ and longer workbenches will have 2 support legs spaced evenly between the end support legs.

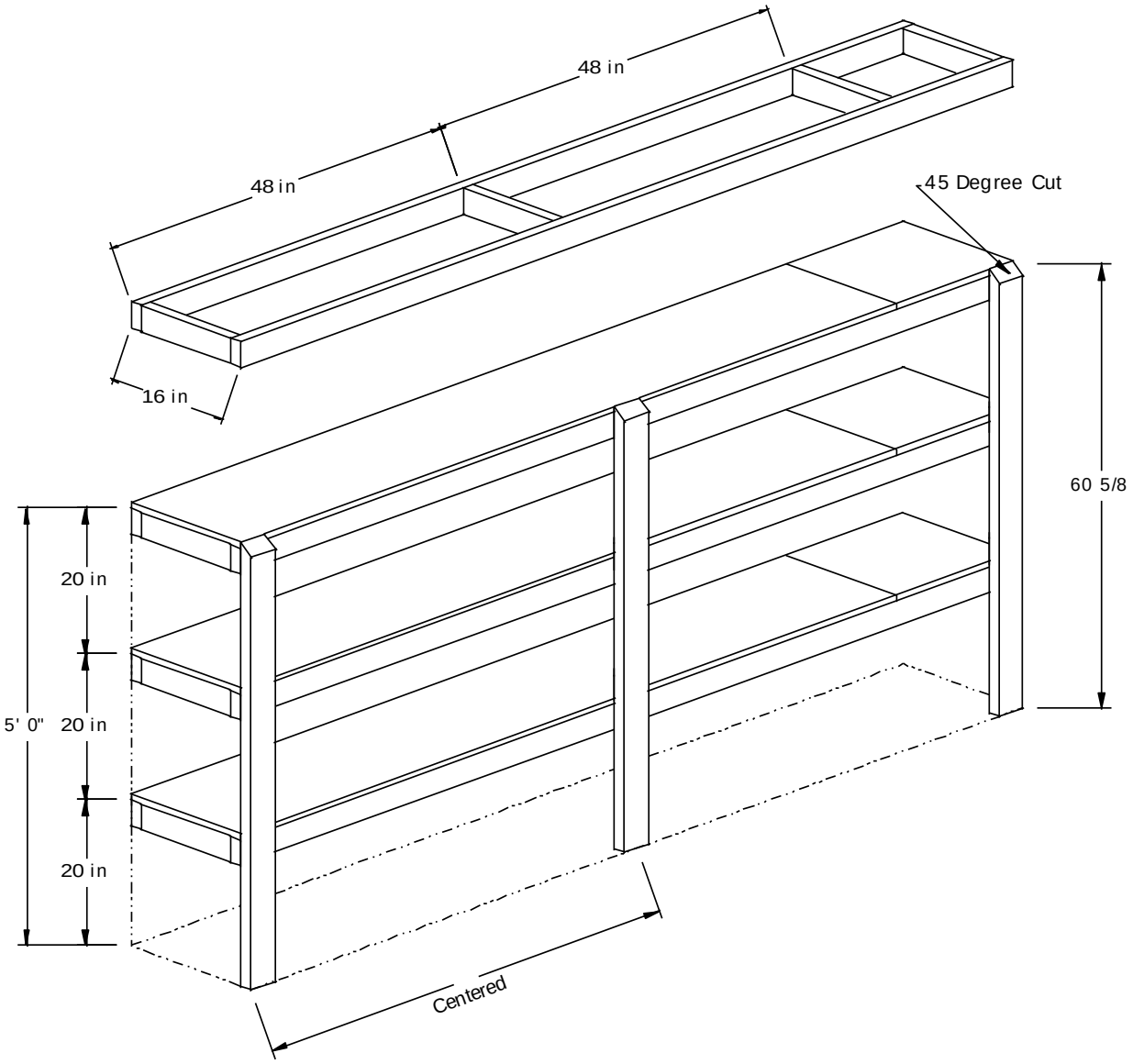

GARAGE AND UTILITY WALL BRACING:

- Utility Style End walls:
  - A support board will be added to the top plate on both end walls of all Utility Style buildings 10’ and Wider.
    - 10’ Wide – 2x4, laid flat across the end wall top plate, the full width of the building, from outside edge to outside edge.
    - 12’ and Wider – 2x6, laid flat across the end wall top plate, the full width of the building, from outside edge to outside edge.
  - Fasten with 3” nails approximately 12” o.c. along the entire board, into the top plate and side walls.
- Utility Style Garage Door Wall:
  - The Garage Door Wall will have a 2x4 brace, cut at 60 degree angle, placed on each side of the door.
    - Will span from the top plate over the door to the side wall top plate in front of the first truss back.

TOP VIEW (OVER THE GARAGE DOOR

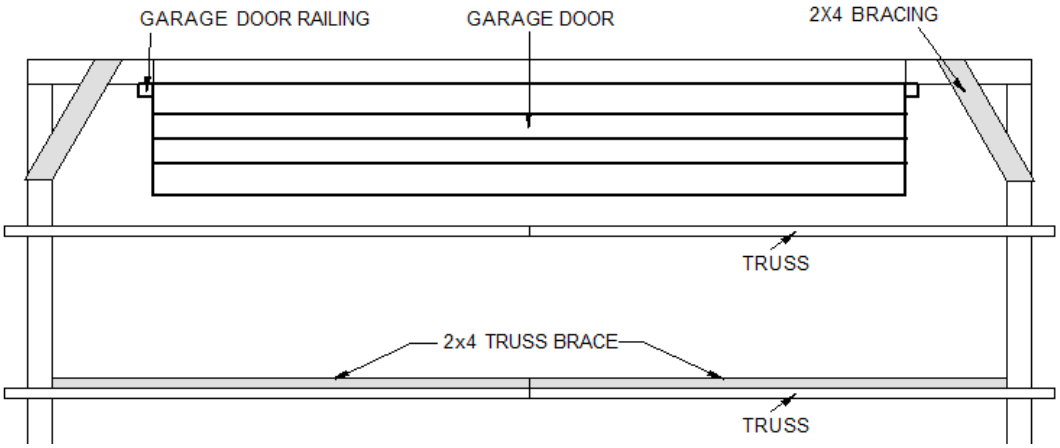

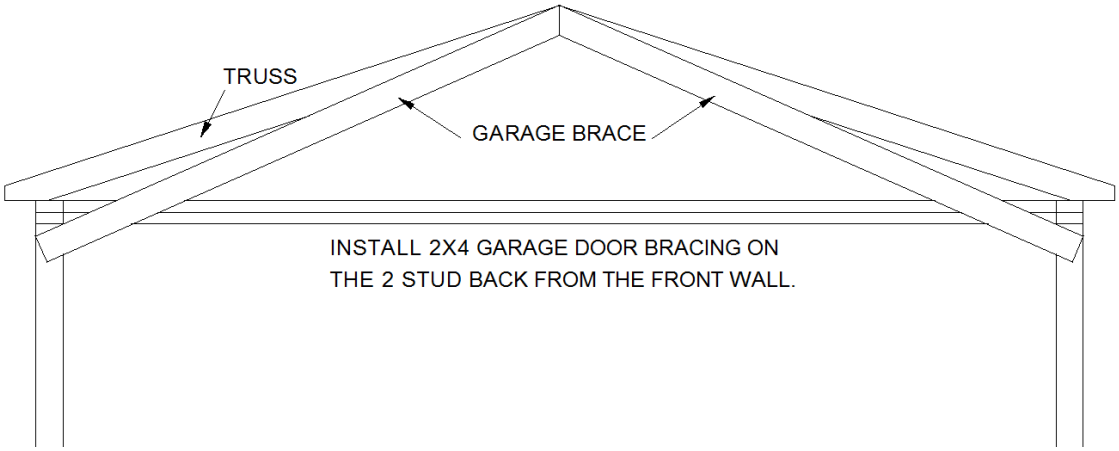

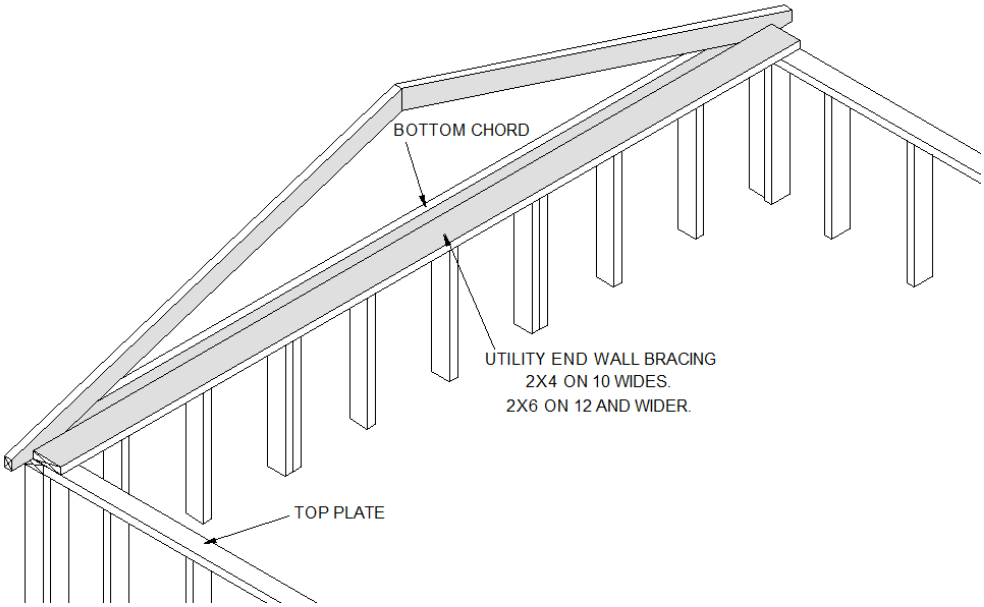

- GRK SCREWS FOR GARAGE DOOR WALL:
  - INSTALL ONE 4” GRK SCREW TO EACH SIDE OF THE GARAGE DOOR WALL.
    - SCREW INTO THE BOTTOM PLATE NEXT TO THE DOOR STUDS

EXAMPLES:

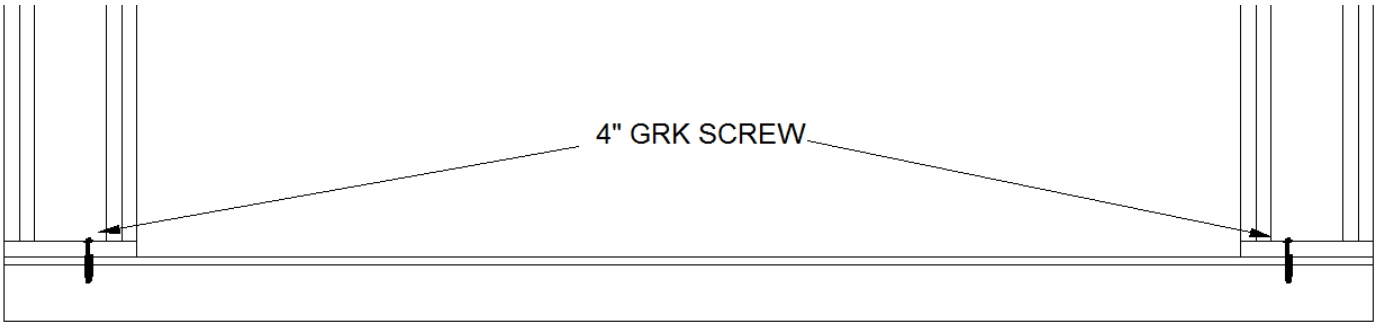

<u>Stor-Mor Portable Buildings are to be constructed with Quality First.</u>